CHOFU
SERVICE MANUAL

ROOM AIR CONDITIONER

RA-0727PU, RA-0927PU, RA-1227PU,
RA-1827PU, RA-2427PU,
RA-0927PVU, RA-1227PVU

CONTENTS

SPECIFICATION 1
FUNCTIONS 15
SERVICE FUNCTION EXPLANATION 17
OPERATION DETAILS 18
TROUBLESHOOTING GUIDE 26
PERFORMANCE CURVE DIAGRAM 40
EXPLODED VIEW (INDOOR UNIT) 48
EXPLODED VIEW (OUTDOOR UNIT) 51
PARTS LIST (INDOOR UNIT) 56
PARTS LIST (OUTDOOR UNIT) 58
ELECTRIC CIRCUIT DIAGRAM 60
REFRIGERANT CYCLE 65

SPECIFICATION

RA-0727PU

		Unit	INDOOR	OUTDOOR
			RC-0727PU	AE-0727PU
Cooling Capacity		BTU/h	6,700	–
Heating Capacity		BTU/h	7,500	–
Moisture Removal		L/h	–	–
Power source		phase	Single	
		V	230	
		Hz	50	
Airflow Method		OUTLET → / INTAKE ←	SIDE VIEW 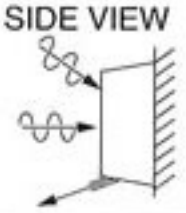	TOP VIEW 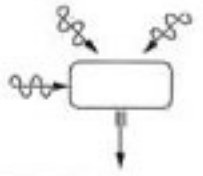
Air circulation (at High)		m^3/min	Cooling ; 6.0 Heating ; 6.5	–
Electrical Data	Input	W	Cooling ; 690 Heating ; 620	–
	Running Current	A	Cooling ; 3.2 Heating ; 2.9	–
	Starting Current	A	16.0	–
Piping Connection Port (Flare piping)		inch	L ; Half Union 1/4"	L ; 2-way valve 1/4"
		inch	G ; Half Union 3/8"	G ; 3-way valve 3/8"
Pipe Size (Flare piping)		inch	L (liquid side) ; 1/4"	L (liquid side) ; 1/4"
		inch	G (gas side) ; 3/8"	G (gas side) ; 3/8"
Drain hose	Inner diameter	mm	14	–
	Length	m	0.7	–
Power Cord	Length	m	1.5	–
	Number of core-wire		core-wire/ 1 mm^2	–
Dimensions	Height	mm	265	490
	Width	mm	795	640
	Depth	mm	175	210
Net Weight		kg	7.2	23

SPECIFICATION

		Unit	INDOOR	OUTDOOR
			RC-0727PU	AE-0727PU
Air Circulation	Type		Cross-flow Fan	Propeller Fan
	Motor Type		Induction (4-pole)	Induction (6-pole)
	Rated Output	W	18	15
Heat Exchanger			Plate fin configuration,forced draft 18.1FPI	19.5 FPI
Refrigerant Control Device			–	Capilary Tube
Refrigerant (R-22)		g (oz)	–	700+50(26.5)
Thermostat			Electronic Control	–
Protection Device			–	OHR
Timer			Real time dual ON/OFF 7-hour OFF	–
Air Filter			Mold-proof	–
Parts Provided			1 Mounting plate 2 Remote controller 3 Battery (2 pcs.) 4 Remote controller holder 5 Screw cap (2 pcs.) 6 Drain elbow	

★ Specifications are subject to change without notice.

RA-0927PU

		Unit	INDOOR	OUTDOOR
			RC-0927PU	AE-0927PU
Cooling Capacity		BTU/h	8,200	–
Heating Capacity		BTU/h	9,800	–
Moisture Removal		L/h	1.7	–
Power source		phase	Single	
		V	230	
		Hz	50	
Airflow Method		OUTLET / INTAKE	SIDE VIEW 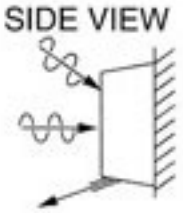	TOP VIEW 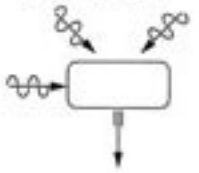
Air circulation (at High)		m^3/min	Cooling ; 7.0 Heating ; 8.0	–
Electrical Data	Input	W	Cooling ; 920 Heating ; 860	–
	Running Current	A	Cooling ; 4.1 Heating ; 3.7	–
	Starting Current	A	19.0	–
Piping Connection Port (Flare piping)		inch	L ; Half Union 1/4"	L ; 2-way valve 1/4"
		inch	G ; Half Union 3/8"	G ; 3-way valve 3/8"
Pipe Size (Flare piping)		inch	L (liquid side) ; 1/4"	L (liquid side) ; 1/4"
		inch	G (gas side) ; 3/8"	G (gas side) ; 3/8"
Drain hose	Inner diameter	mm	14	–
	Length	m	0.7	–
Power Cord	Length	m	1.5	–
	Number of core-wire		core-wire/ 1 mm^2	–
Dimensions	Height	mm	265	490
	Width	mm	795	640
	Depth	mm	175	210
Net Weight		kg	7.2	25

SPECIFICATION

		Unit	INDOOR	OUTDOOR
			RC-0927PU	AE-0927PU
Air Circulation	Type		Cross-flow Fan	Propeller Fan
	Motor Type		Induction (4-pole)	Induction (6-pole)
	Rated Output	W	18	15
Heat Exchanger			Plate fin configuration,forced draft 18.1FPI	19.5FPI
Refrigerant Control Device			–	Capilary Tube
Refrigerant (R-22)		g (oz)	–	700+50(26.5)
Thermostat			Electronic Control	–
Protection Device			–	OLR
Timer			Real time dual ON/OFF 7-hour OFF	–
Air Filter			Mold-proof	–
Parts Provided			1 Mounting plate 2 Remote controller 3 Battery (2 pcs.) 4 Remote controller holder 5 Screw cap (2 pcs.) 6 Drain elbow	

★ Specifications are subject to change without notice.

RA-1227PU

		Unit	INDOOR	OUTDOOR
			RC-1227PU	AE-1227PU
Cooling Capacity		BTU/h	11,200	–
Heating Capacity		BTU/h	13,200	–
Moisture Removal		L/h	2.0	–
Power source		phase	Single	
		V	230	
		Hz	50	
Airflow Method		OUTLET / INTAKE	SIDE VIEW 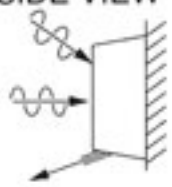	TOP VIEW 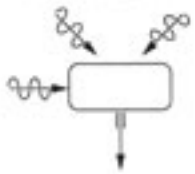
Air circulation (at High)		m^3/min	Cooling ; 7.5 Heating ; 8.0	–
Electrical Data	Input	W	Cooling ; 1,200 Heating ; 1,170	–
	Running Current	A	Cooling ; 5.6 Heating ; 5.2	–
	Starting Current	A	32.0	–
Piping Connection Port (Flare piping)		inch	L ; Half Union 1/4"	L ; 2-way valve 1/4"
		inch	G ; Half Union 3/8"	G ; 3-way valve 3/8"
Pipe Size (Flare piping)		inch	L (liquid side) ; 1/4"	L (liquid side) ; 1/4"
		inch	G (gas side) ; 3/8"	G (gas side) ; 3/8"'
Drain hose	Inner diameter	mm	14	–
	Length	m	0.7	–
Power Cord	Length	m	1.5	–
	Number of core-wire		core-wire/ 1 mm^2	–
Dimensions	Height	mm	265	545
	Width	mm	795	710
	Depth	mm	182	255
Net Weight		kg	8.3	28.0

SPECIFICATION

		Unit	INDOOR	OUTDOOR
			RC-1227PU	AE-1227PU
Air Circulation	Type		Cross-flow Fan	Propeller Fan
	Motor Type		Induction (4-pole)	Induction (6-pole)
	Rated Output	W	22	20
Heat Exchanger			Plate fin configuration,forced draft	
			19.5FPI	18.1 FPI
Refrigerant Control Device			–	Capilary Tube
Refrigerant (R-22)		g (oz)	–	800+50(30.0)
Thermostat			Electronic Control	–
Protection Device			–	OHR
Timer			Real time dual ON/OFF 7-hour OFF	–
Air Filter			Mold-proof	–
Parts Provided			1 Mounting plate 2 Remote controller 3 Battery (2 pcs.) 4 Remote controller holder 5 Screw cap (2 pcs.) 6 Drain elbow	

★ Specifications are subject to change without notice.

RA-1827PU

		Unit	INDOOR	OUTDOOR
			RC-1827PU	AE-1827PU
Cooling Capacity		BTU/h	17,100	–
Heating Capacity		BTU/h	20,500	–
Moisture Removal		L/h	3.4	–
Power source		phase	Single	
		V	230	
		Hz	50	
Airflow Method		OUTLET / INTAKE	SIDE VIEW 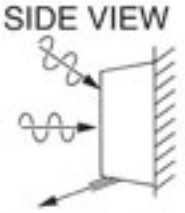	TOP VIEW 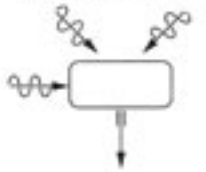
Air circulation (at High)		m^3/min	Cooling ; 12.0 Heating ; 12.0	–
Electrical Data	Input	W	Cooling ; 1,950 Heating ; 1,870	–
	Running Current	A	Cooling ; 8.8 Heating ; 8.5	–
	Starting Current	A	32.0	–
Piping Connection Port (Flare piping)		inch	L ; Half Union 1/4"	L ; 2-way valve 1/4"
		inch	G ; Half Union 1/2"	G ; 3-way valve 1/2"
Pipe Size (Flare piping)		inch	L (liquid side) ; 1/4"	L (liquid side) ; 1/4"
		inch	G (gas side) ; 1/2"	G (gas side) ; 1/2"
Drain hose	Inner diameter	mm	14	–
	Length	m	0.6	–
Power Cord	Length	m	2.3	–
	Number of core-wire		core-wire/ 2 mm^2	–
Dimensions	Height	mm	297	642
	Width	mm	799	780
	Depth	mm	210	245
Net Weight		kg	9.3	44

SPECIFICATION

		Unit	INDOOR	OUTDOOR
			RC-1827PU	AE-1827PU
Air Circulation	Type		Cross-flow Fan	Propeller Fan
	Motor Type		Induction (4-pole)	Induction (6-pole)
	Rated Output	W	30	38
Heat Exchanger			Plate fin configuration,forced draft 18.3FPI	19.5 FPI
Refrigerant Control Device			–	Capilary Tube
Refrigerant (R-22)		g (oz)	–	1,600+80(56.4)
Thermostat			Electronic Control	–
Protection Device			–	OLR
Timer			Real time dual ON/OFF 7-hour OFF	–
Air Filter			Mold-proof	–
Parts Provided			1 Mounting plate 2 Remote controller 3 Battery (2 pcs.) 4 Remote controller holder 5 Screw cap (2 pcs.) 6 Drain elbow	

★ Specifications are subject to change without notice.

RA-2427PU

		Unit	INDOOR	OUTDOOR
			RC-2427PU	AE-2427PU
Cooling Capacity		BTU/h	20,500	–
Heating Capacity		BTU/h	24,500	–
Moisture Removal		L/h	4.2	–
Power source		phase	Single	
		V	230	
		Hz	50	
Airflow Method		OUTLET INTAKE	SIDE VIEW 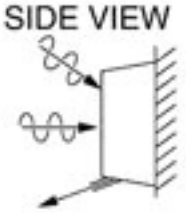	TOP VIEW 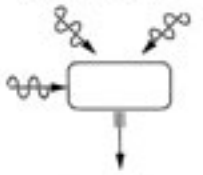
Air circulation (at High)		m^3/min	Cooling ; 14.0 Heating ; 15.0	–
Electrical Data	Input	W	Cooling ; 2,330 Heating ; 2,320	–
	Running Current	A	Cooling ; 10.4 Heating ; 10.4	–
	Starting Current	A	43.0	–
Piping Connection Port (Flare piping)		inch	L ; Half Union 1/4"	L ; 2-way valve 1/4"
		inch	G ; Half Union 5/8"	G ; 3-way valve 5/8"
Pipe Size (Flare piping)		inch	L (liquid side) ; 1/4"	L (liquid side) ; 1/4"
		inch	G (gas side) ; 5/8"	G (gas side) ; 5/8"
Drain hose	Inner diameter	mm	14	–
	Length	m	0.6	–
Power Cord	Length	m	2.3	–
	Number of core-wire		core-wire/ 2 mm^2	–
Dimensions	Height	mm	295	643
	Width	mm	799	850
	Depth	mm	210	330
Net Weight		kg	9.3	55

SPECIFICATION

		Unit	INDOOR	OUTDOOR
			RC-2427PU	AE-2427PU
Air Circulation	Type		Cross-flow Fan	Propeller Fan
	Motor Type		Induction (4-pole)	Induction (6-pole)
	Rated Output	W	30	100
Heat Exchanger			Plate fin configuration,forced draft 18.3FPI	15.9FPI
Refrigerant Control Device			–	
Refrigerant (R-22)		g (oz)	–	1,860+80(65.6)
Thermostat			Electronic Control	–
Protection Device			–	OLR
Timer			Real time dual ON/OFF 7-hour OFF	–
Air Filter			Mold-proof	–
Parts Provided			1 Mounting plate 2 Remote controller 3 Battery (2 pcs.) 4 Remote controller holder 5 Screw cap (2 pcs.)	

★ Specifications are subject to change without notice.

RA-0927PVU

		Unit	INDOOR	OUTDOOR
			RC-0927PVU	AE-0927PVU
Cooling Capacity		BTU/h	8,500(5,100-10,000)	–
Heating Capacity		BTU/h	11,000(5,100-14,000)	–
Moisture Removal		L/h	1.6	–
Power source		phase	Single	
		V	230	
		Hz	50	
Airflow Method		OUTLET INTAKE	SIDE VIEW 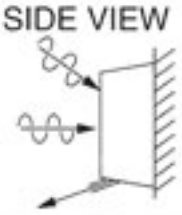	TOP VIEW 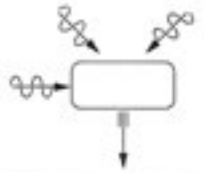
Air circulation (at High)		m^3/min	Cooling ; 7.0 Heating ; 8.0	–
Electrical Data	Input	W	Cooling ; 1,050 Heating ; 1,230	–
	Running Current	A	Cooling ; 5.1 Heating ; 5.9	–
	Starting Current	A	5.9	–
Piping Connection Port (Flare piping)		inch	L ; Half Union 1/4"	L ; 2-way valve 1/4"
		inch	G ; Half Union 3/8"	G ; 3-way valve 3/8"
Pipe Size (Flare piping)		inch	L (liquid side) ; 1/4"	L (liquid side) ; 1/4"
		inch	G (gas side) ; 3/8"	G (gas side) ; 3/8"
Drain hose	Inner diameter	mm	14	–
	Length	m	0.7	–
Power Cord	Length	m	1.5	–
	Number of core-wire		core-wire/ 1 mm^2	–
Dimensions	Height	mm	265	545
	Width	mm	795	710
	Depth	mm	175	255
Net Weight		kg	7.2	30

SPECIFICATION

		Unit	INDOOR	OUTDOOR
			RC-0927PVU	AE-0927PVU
Air Circulation	Type		Cross-flow Fan	Propeller Fan
	Motor Type		Induction (4-pole)	Induction (6-pole)
	Rated Output	W	18	21
Heat Exchanger			Plate fin configuration,forced draft	
			18.1FPI	14.5FPI
Refrigerant Control Device			–	Capilary Tube
Refrigerant (R-22)		g (oz)	–	680+30(25.0)
Thermostat			Electronic Control	–
Timer			Real time dual ON/OFF 7-hour OFF	–
Air Filter			Mold-proof	–
Parts Provided			1 Mounting plate 2 Remote controller 3 Battery (2 pcs.) 4 Remote controller holder 5 Screw cap (2 pcs.) 6 Drain elbow	

★ Specifications are subject to change without notice.

RA-1227PVU

		Unit	INDOOR	OUTDOOR
			RC-1227PVU	AE-1227PVU
Cooling Capacity		BTU/h	11,200	–
Heating Capacity		BTU/h	12,700	–
Moisture Removal		L/h	1.6	–
Power source		phase	Single	
		V	230	
		Hz	50	
Airflow Method		OUTLET INTAKE	SIDE VIEW 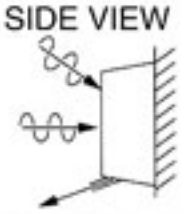	TOP VIEW 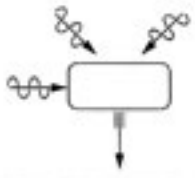
Air circulation (at High)		m^3/min	Cooling ; 8.0 Heating ; 8.5	–
Electrical Data	Input	W	Cooling ; 1,270 Heating ; 1,170	–
	Running Current	A	Cooling ; 6.2 Heating ; 5.7	–
	Starting Current	A	6.2	–
Piping Connection Port (Flare piping)		inch	L ; Half Union 1/4"	L ; 2-way valve 1/4"
		inch	G ; Half Union 3/8"	G ; 3-way valve 3/8"
Pipe Size (Flare piping)		inch	L (liquid side) ; 1/4"	L (liquid side) ; 1/4"
		inch	G (gas side) ; 3/8"	G (gas side) ; 3/8"
Drain hose	Inner diameter	mm	14	–
	Length	m	0.7	–
Power Cord	Length	m	1.5	–
	Number of core-wire		core-wire/ 1 mm^2	–
Dimensions	Height	mm	265	545
	Width	mm	795	710
	Depth	mm	182	255
Net Weight		kg	8.3	30.0

SPECIFICATION

		Unit	INDOOR	OUTDOOR
			RC-1227PVU	AE-1227PVU
Air Circulation	Type		Cross-flow Fan	Propeller Fan
	Motor Type		Induction (4-pole)	Induction (6-pole)
	Rated Output	W	22	20
Heat Exchanger			Plate fin configuration,forced draft	
			19.5 FPI	18.1FPI
Refrigerant Control Device			–	Capilary Tube
Refrigerant (R-22)		g (oz)	–	800+50(30.0)
Thermostat			Electronic Control	–
Timer			Real time dual ON/OFF 7-hour OFF	–
Air Filter			Mold-proof	–
Parts Provided			1 Mounting plate 2 Remote controller 3 Battery (2 pcs.) 4 Remote controller holder 5 Screw cap (2 pcs.) 6 Drain elbow	

★ Specifications are subject to change without notice.

ALL MODELS

REMOTE-CONTROL TRANSMITTER

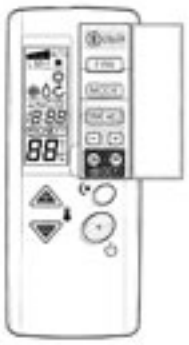

ON/OFF

Operation mode selection
AUTOMATIC
COOL
DRY
HEAT
CIRCULATER

Air flow selection
AUTOMATIC
HIGH
MEDIUM
LOW

Room temperature setting
16°C ~ 30°C

Timer operation selection
CONTINUOUS operation
OFF
ON
Sleep

Timer / time setting
Operation stops at the set time(OFF timer)
Operation starts at the set time(ON timer)
0.5 ~ 7.0hours(Sleep timer)

Air flow direction control
Auto angle selection
Auto swing mode
Manual mode

INDOOR UNIT

Sensing the room temperature
Room temperature sensor (thermistor)

Time delay safety control
Restarting is inhibited for approximately 3 minutes.

Indoor fan speed control
High, Med, Low

Operation indication lamps (LED)
(GREEN)..... Light up in operation
(YELLOW) .... Timer in operation
(GREEN)..... Outdoor unit operate

Dry operation mode
Intermittent operation of fan at low speed.

Room temperature control
Maintains the room temperature in accordance with the setting temperature.

Deice (defrost) control
Deicing operation automatically starts when the heating efficiency is declined by the ice formed in the outdoor unit.
After deicing operation, heating operation automatically starts with "Hot start function."

OUTDOOR UNIT

Hot-start control (heating) ★1

The indoor fan stops until the evaporator piping temperature will be reached.

Overload protection

Anti-freezing control for the evaporator

Compressor will be stopped when the evapolator's piping temperature is below 2℃ for one minute.
Compressor will be restarted when the evaporator's piping temperature is above 2℃.

Airflow direction control

Automatic airflow direction control
The louver automatically swings up and down (cooling, dry)...horizontal and 30° downward.
The louver is set at 60° downward during heating operation.
The louver is set as horizontal when the fan is stopped.
Airflow direction manual control.
Can be set within a range at horizontal to 60° downward.

Auto recovery function

If there is any power failure during operation, operation status before power failure is memorized.
3 ~ 4 minutes after power recovery, the unit restarts automatically with previous operation status memorized.
(3 ~ 4 minutes is protective time for compressor.)

Attention

Because of Auto Recovery Function, if shutting off the power supply during operation, the unit may restart irrespective your intention when turning on the power supply next time.
If the unit is not to be used for a long time, shut off the power supply after terminating all operation with remote controller.

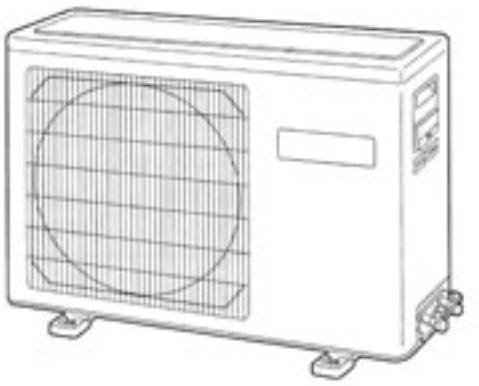

Compressor overload protector

When overheating of the compressor is detected,protector ★2 stops the operation of the compressor.
When high current supplied to the compressor is detected, the main controller stops the operaiton of outdoor unit including compressor

3 min. forced operation control

Once the compressor is activated, it does not stop for 3 minutes.
In case of termination of this operation, push the ON/OFF button on remote controller.

★1 Heatpump type only

★2 OHR(Over Heat Relay)····RA-0727PU RA-1227PU
OLR(Over LoadRelay)····RA-0927PU
INNER PROTECTOR·····RA-1827PU RA-2427PU

Emergency Operation

- Use this operation only when the remote controller is out of order or lost.
- When the emergency operation switch is pressed, the "Pi" sound starts once, which means the start of this operation.
- In this operation, the system automatically selects the operation modes, cooling (or heating when available) according to the room temperature, as follows.

Temperature	Operation mode	Designated temperature	Timer mode	Air flow
ABOVE 23°C	COOLING	26°C	CONTINUOUS	AUTOMATIC
BELOW 23°C	HEATING	23°C	CONTINUOUS	AUTOMATIC

- It is not possible to operate in dry mode.

Test Operation

Test operation switch is same as emergency one.

- Use this operation only for testing the performance of the machine in the condition where the room temperature is less than 16°C.
- Continue to press the test operation switch for more than 5 seconds. After you hear the "Pi" sound twice, release your finger from the switch: the cooling operation starts with the air flow speed "HI."
- If the test operation switch is pressed more than 10 seconds, it doesn't work.
- After 30 minutes, test operation ends automatically.

HOW TO RELEASE EMERGENCY AND TEST OPERATION

- In case of releasing during those operations, you can either push emergency operation switch once more or apply operation using remote control.

  You will hear a beep sound and emergency/ test operation is released.
- If you release the operation by remote control, operation will continue as setting of the remote control automatically.

INTERFERENCE PREVENTION OF SIGNALS FROM THE REMOTE CONTROLLER

When two indoor units used in the same room, interference of the signals may happen. To avoid this, alternative signal model B can be selected by the following. (Ex-factory setting is mode A)

- Remote controller side : Have "J1" on the PC board short-circuited by soldering.
- Indoor unit side : Cut "R7" on the PC board.
  (All models except inverter type)
  Cut "R24" on the PC board(All inverter type)

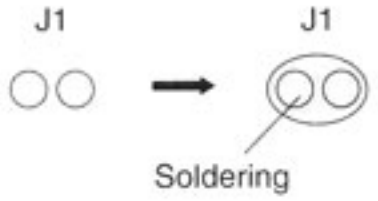

(Each Operations Details)

<Remote control unit>

Ex-factory setting (Mode A)

Have "J1"on the PC board short-circuited by soldering (Mode B)

<Indoor unit>

Ex-factory setting (Mode A)

Cut R7 or R24 on the PC board (Mode B)

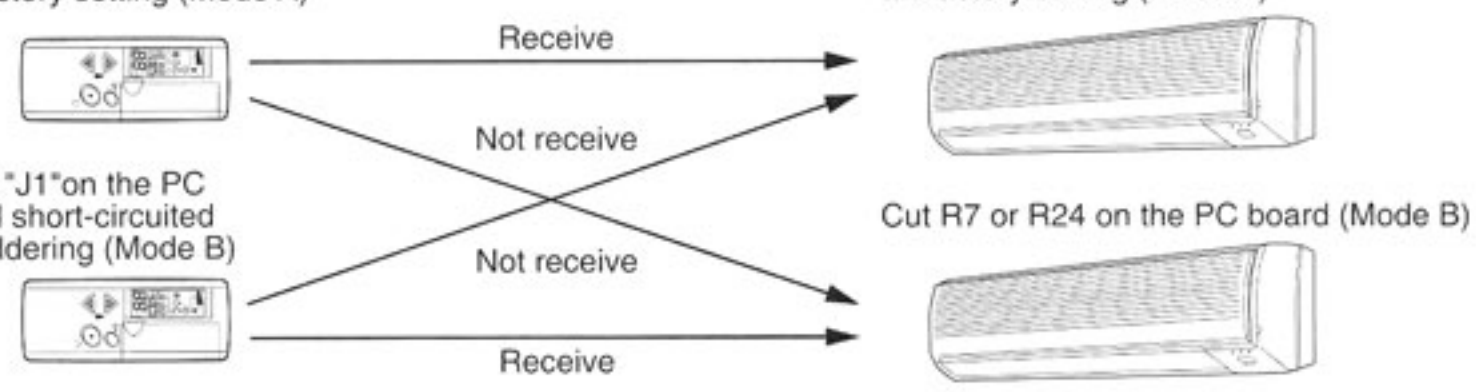

TIMER OPERATION

ON Timer operation

- Press the ON/OFF switch.
- Set the "ON Time" : Press the "TIME ADJ" button twice.
  Adjust the time with the "⊞, ⊟" button.
  Press the "TIME ADJ" button twice.The setting of "ON Time" is complete and the present time appears on the LCD.
- Set the "ON Timer" : Press the Timer fixing button "ON".

OFF Timer operation

- Press the ON/OFF switch.
- Set the "OFF Time" : Press the "TIME ADJ" button 3 times.
  Adjust the time with the "⊞, ⊟" button.
  Press the "TIME ADJ" button once.The setting of "OFF Time" is complete and the present time appears on the LCD.
- Set the "OFF Timer" : Press the Timer fixing button "OFF".

Sleep Timer operation

- Press the "SLEEP" button during the operation.
- Set the operating period by pressing the "SLEEP" button until the period appears on the LCD.

Timer Cancellation

- ON/OFF Timer : Press the Timer fixing button "ON"(On Timer) and/or "OFF"(Off Timer) once again.
- Sleep Timer : Press the "SLEEP" button until the operating period on the LCD disappears.

AIRFLOW DIRECTION CONTROL

Vertical adjustment

When ON/OFF switch is pressed, the vertical louver will move to the adequate positions for each operation automatically.

Swing of air flow

If air flow direction switch is pressed once, the vertical louver will move within the range of figures.

Fixing the flow direction

If air flow direction switch is pressed again, the vertical louver will be fixed and that position is memorized. From the next operation the louver will be set at previous position automatically.

Notes :

- In Swing Mode, the louver automatically moves up and down within the certain range, as the illustration below.
- There is two different ranges of louver swinging; one is of cooling & dry mode operation and the other is of heating operation.

During Cooling, Dry Operation

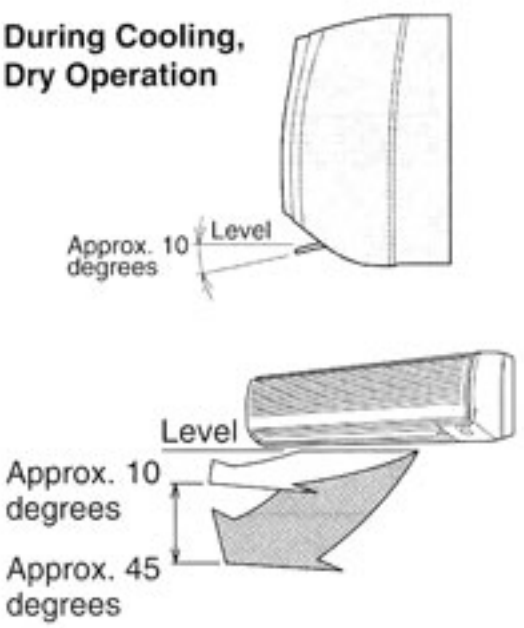

During Heating Operation

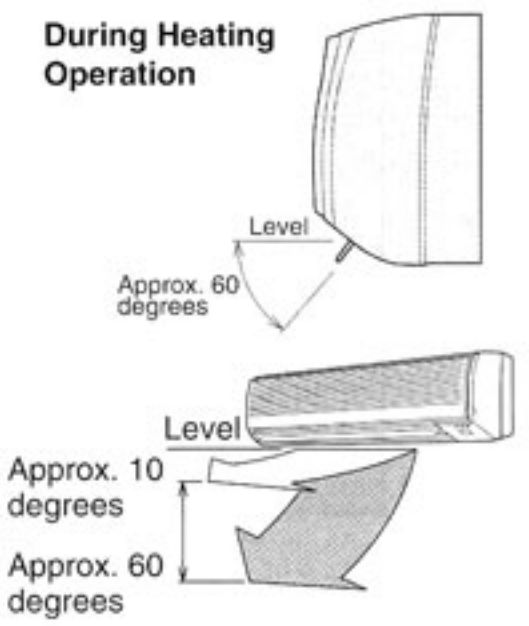

TIME DELAY SAFETY CONTROL FUNCTION - FOR PROTECTION OF COMPRESSOR

- Compressor will not restart, in any operation modes, for 3 minutes after its stop.
- Compressor does not stop during the first 3 minutes of its operation even if the room temperature reaches to the designated temperature, except changing setting temperature.

ALL MODELS EXCEPT INVERTER TYPE

COOLING MODE OPERATION

- Compressor stops when the room temperature is cooled down to the designated temperature.
- Compressor restarts when room temperature is raised to +0.7℃ higher than the designated temperature.

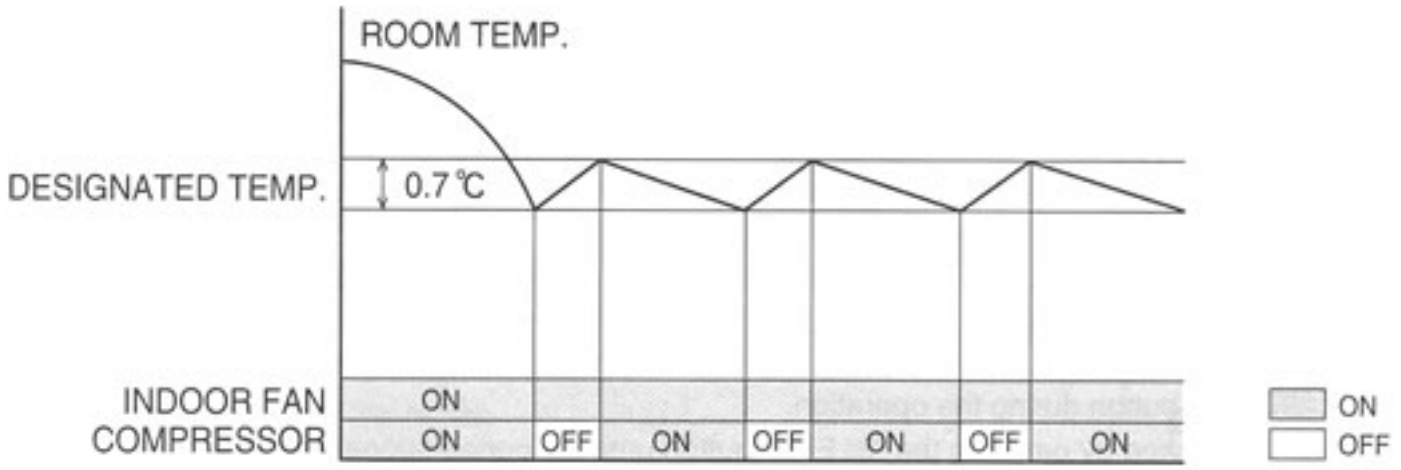

DRY MODE OPERATION

1. When the room temperature is +2℃ (or more) higher than designated temperature, compressor and indoor fan operate.
2. When the room temperature has been cooled to the temperature +2℃ higher than the designated, the compressor and indoor fan start intermittent operation, ON (for 10 min.) and OFF (for 6 min.) by turns. The air flow speed of indoor fan is super low.
3. When the room temperature is cooled to designated temperature, compressor and indoor fan stop. The indoor fan restarts at the air flow speed of super low, after 3 minutes the compressor stops.
4. When the room temperature is raised to +0.7℃ higher than the designated temperature, the intermittent operation above #2 starts.
5. When operating in #2 above, if the room temperature becomes +2.7℃ higher than the designated, the operation #1 above starts.

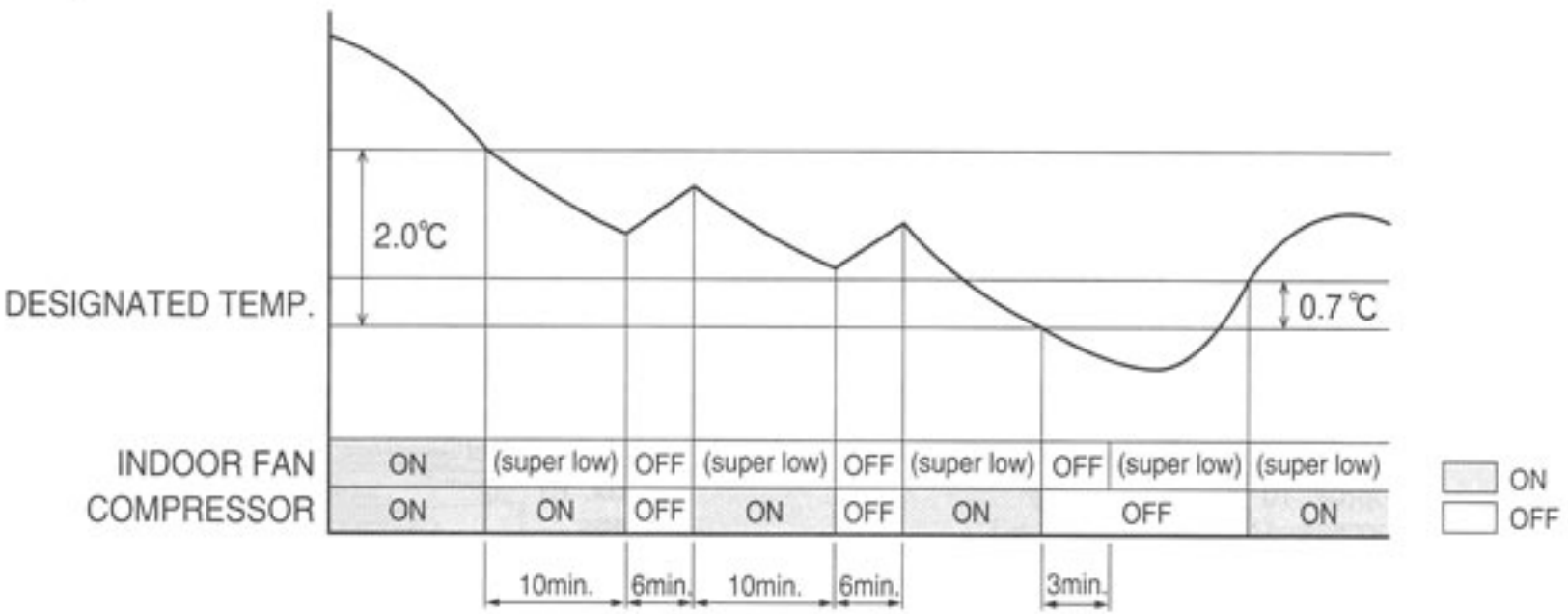

COOLING AND HEATING TYPE EXCEPT INVERTER TYPE

HEATING MODE OPERATION

- When room temperature is raised to +4℃ higher than the designated temperature, compressor stops.
- When room temperature gets less than +3.3℃ higher than the designated temperature, compressor turns on.
- At the start of heating operation, if the room temperature is less than +10℃, additional +1℃ is set to the temperature designated by the remote controller. (Canceled when the compressor first stops.)
- Hot Start Function
  To prevent the unpleasant cold air to flow, the air flow speed is determined as shown below according to the temperature of the indoor heat exchanger.

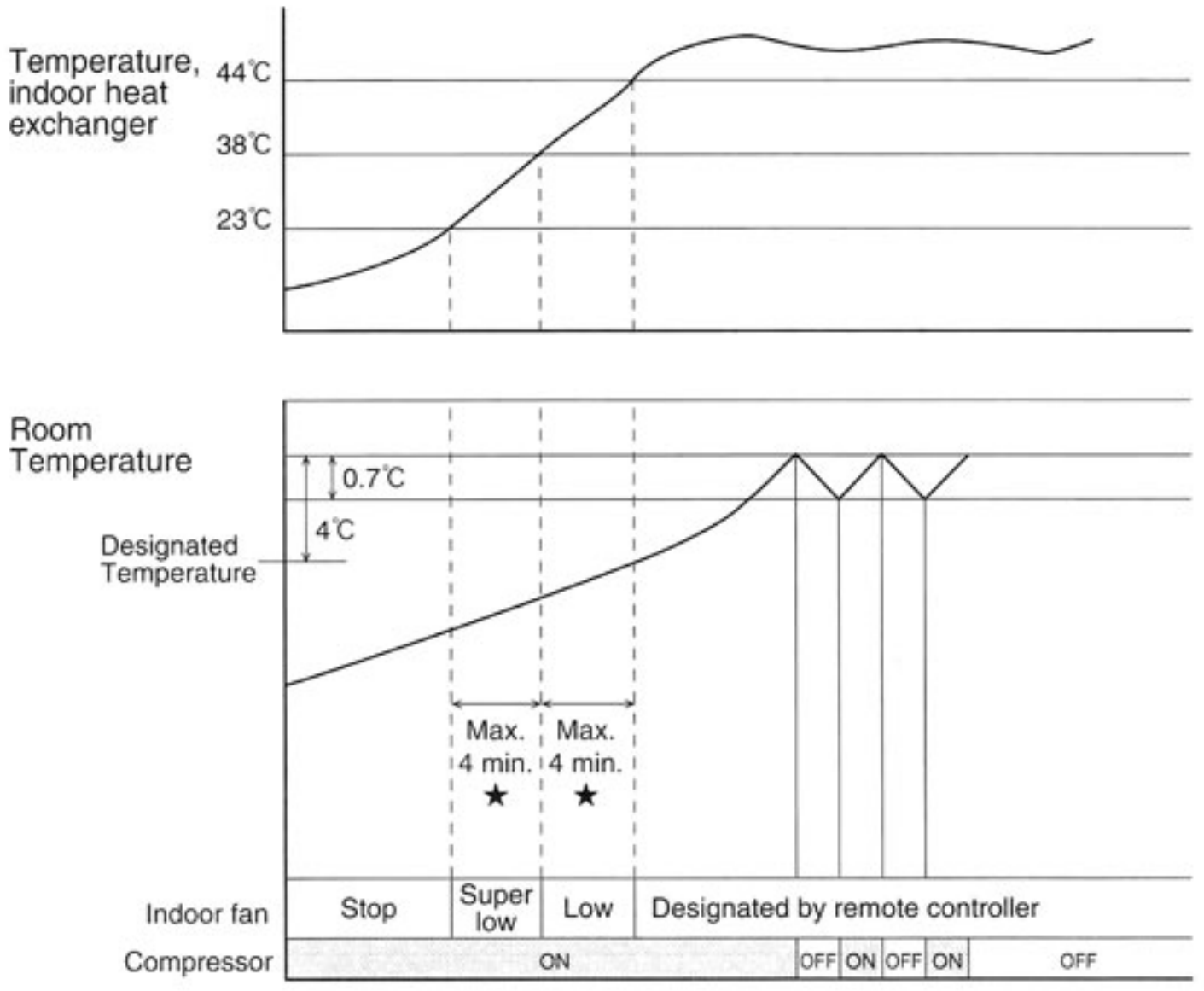

★ : In maximum 4 minutes,the operation proceed to the next steps when the heat exchanger is not warmed up to the reference temperature shown above.

ON
OFF

COOLING AND HEATING TYPE EXCEPT INVERTER TYPE

DEFROSTING OPERATION

- Defrosting operation is controlled by room temperature, temperature of indoor heat exchanger and timer switch.
- Defrosting operation start when

(a) 50 minutes pass after the start of heating operation or after the completion of previous defrosting operation, and while compressor is running, the temperature of indoor heat exchanger falls below "room temperature +14℃". Condition(a)

or

(b) accumulated time for the stop of outdoor fan, which is for the protection of compressor from excess current or for the prevention of overheating of indoor heat exchanger, exceeds 90 minutes after the start of heating operation or after the completion of previous defrosting operation. Condition(b)

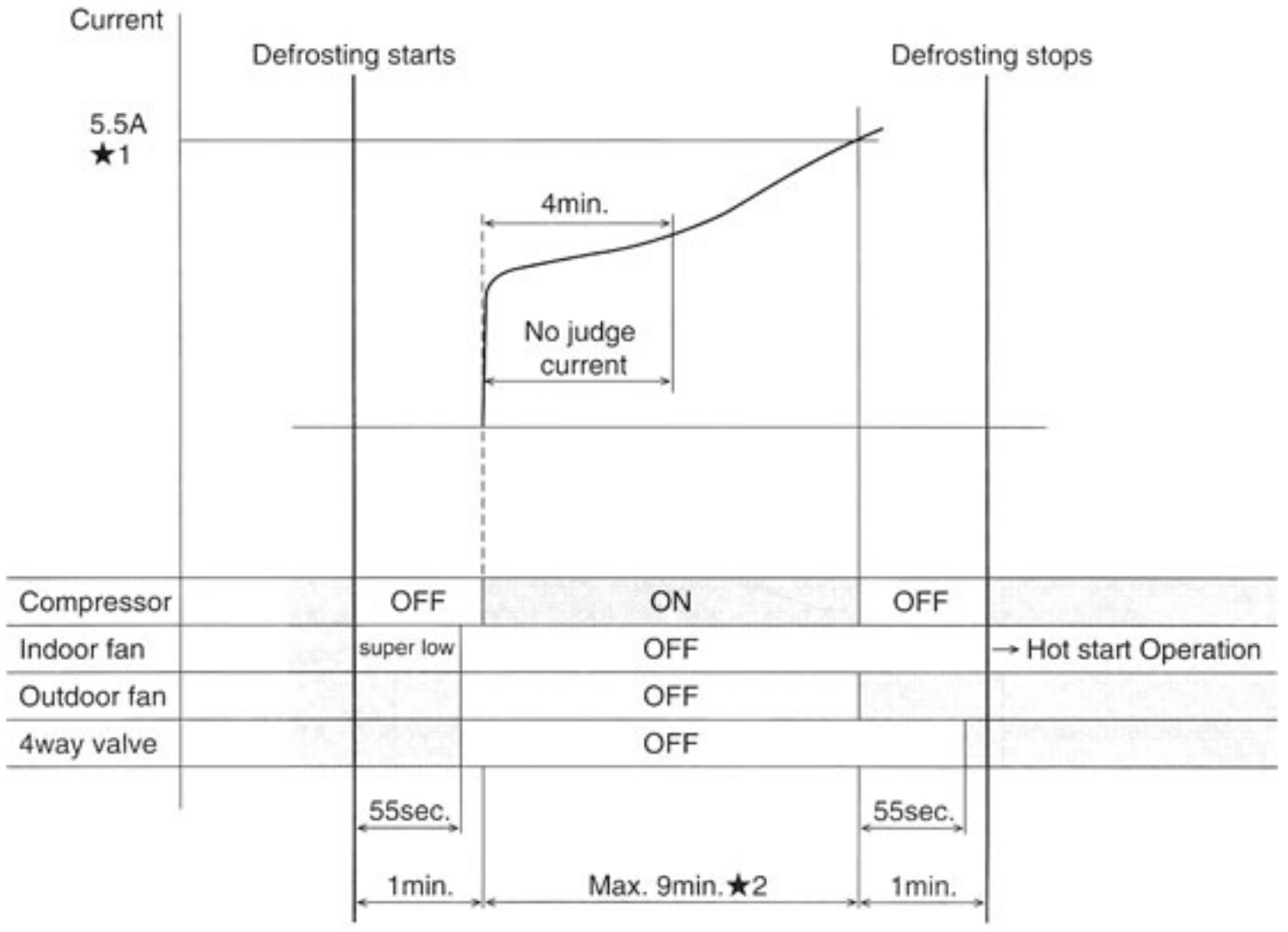

	Condition(a)	Condition(b)
★ : 1. RA-0727PU	4.0A (or 5.1A once in four defrosting operation)	3.2A
RA-0927PU	4.0A (or 5.1A once in four defrosting operation)	3.5A
RA-1227PU	7.0A	5.6A
RA-1827PU	6.7A	5.6A
RA-2427PU	7.5A	6.5A

2. Defrosting operation is called off after 9 minutes at maximum, even if the current value does not reach to the above.

RA-0927PVU/RA-1227PVU

COOLING MODE OPERATION

- Compressor stops when the room temperature reaches 0.7°C lower than the designated temperature or lower and keep that temperature continuously for two minutes. Note*
- Compressor restarts when room temperature rises to the designated temperature (or to the temperature lower than the designated by 0.7°C. Note*

Note* : Only for the initial operation, if the designated temperature is lower by 3°C or more than the room temperature, the compressor makes its first stop when the room temperature reaches 1.3°C lower than the designated and makes its first restart when the room temperature reaches to 0.7°C lower than the temperature.

- The operating frequency of the compressor is determined according to the room temperature. (see the diagram below).

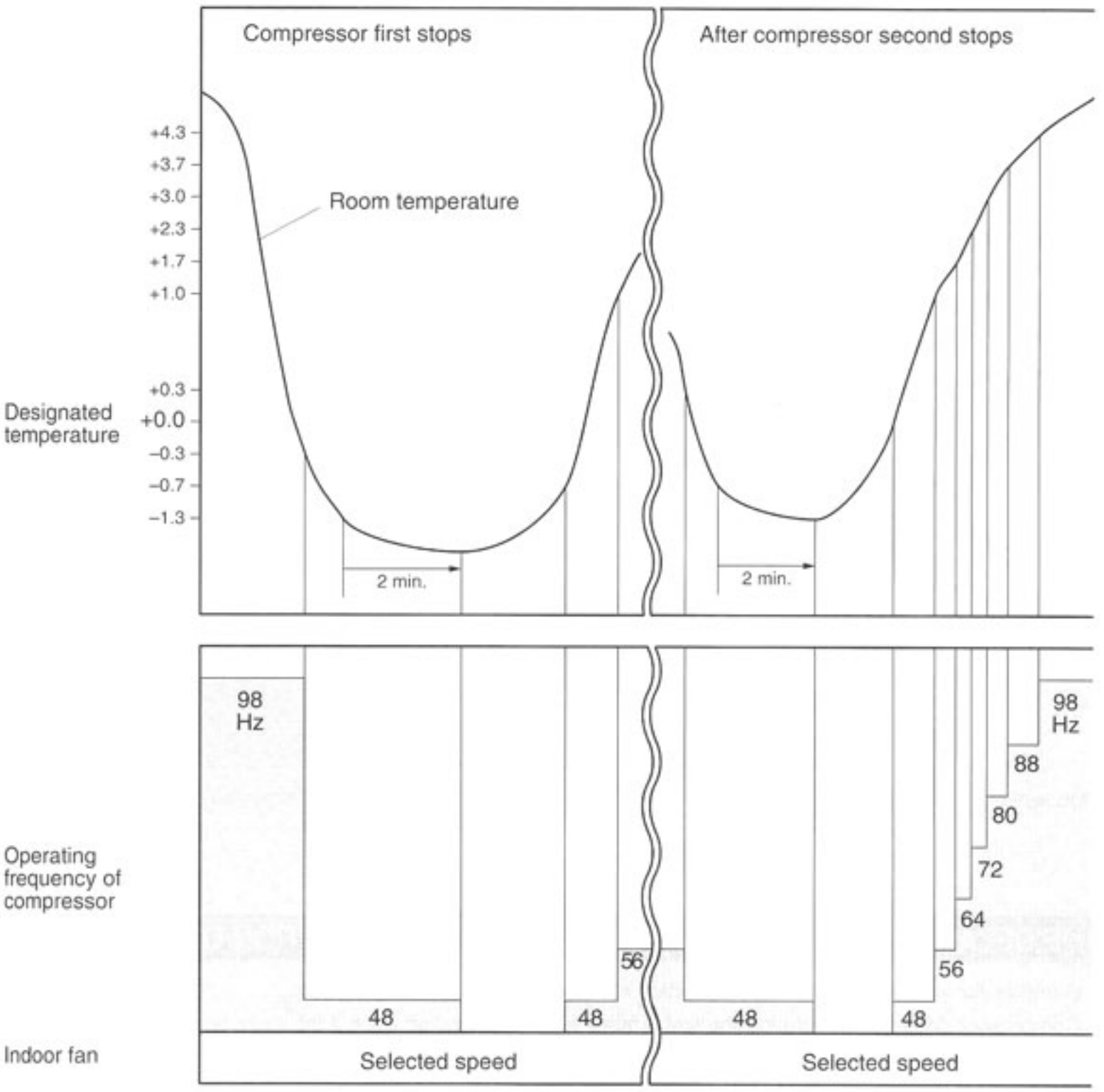

RA-0927PVU/RA-1227PVU

DRY MODE OPERATION

- Compressor stops when the room temperature fall to 0.7°C lower than the designated temperature continuously for two minutes.
- Compressor restarts when room temperature rises to the designated temperature.
- The operating frequency of the compressor is determined according to the room temperature (see the diagram below).

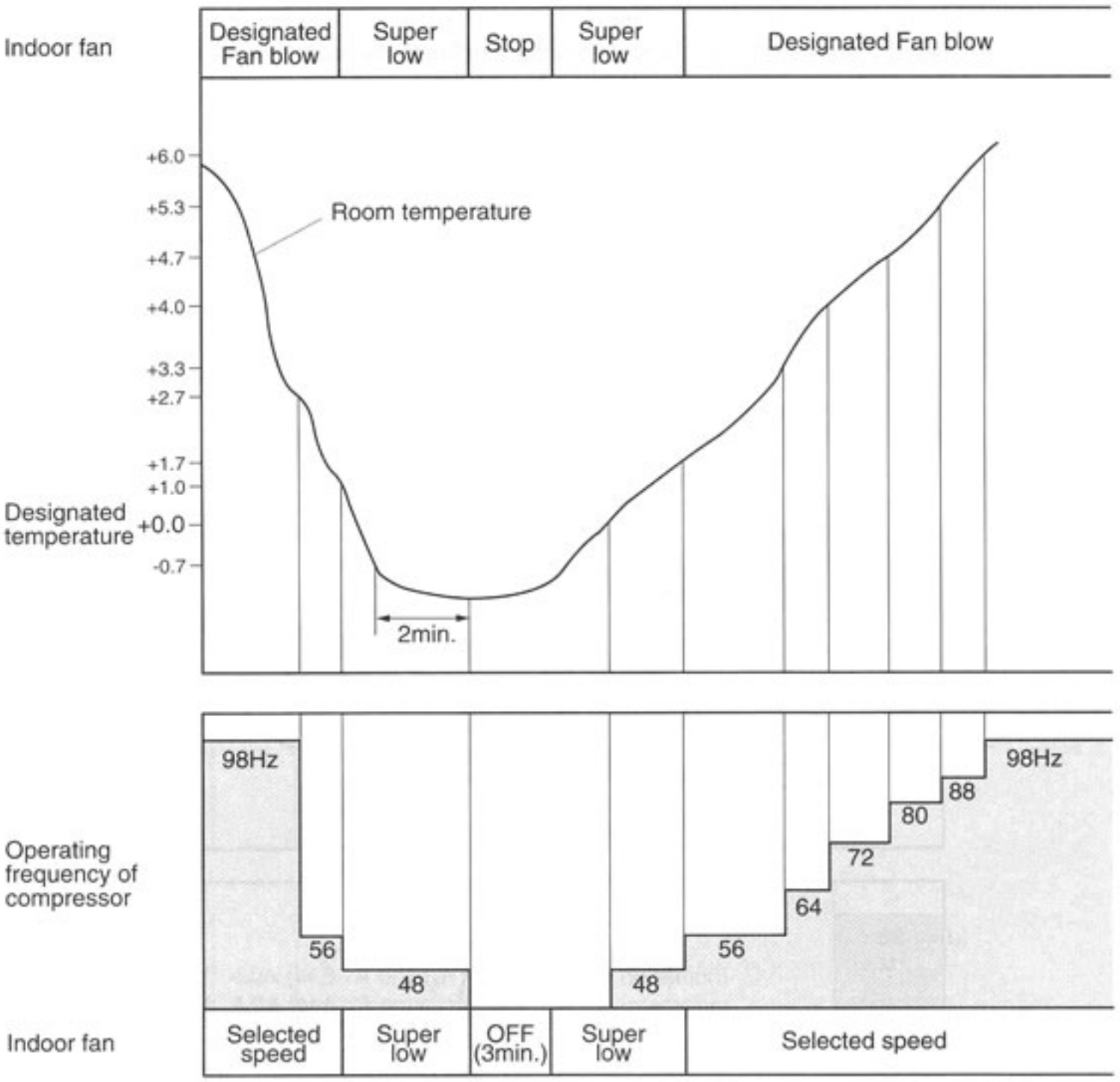

TIME DELAY SAFETY CONTROL FUNCTION - FOR PROTECTION OF COMPRESSOR

- Compressor will not restart, in any operation modes, for 3 minutes after its stop.
- Compressor does not stop during the first 3 minutes of its operation even if the room temperature reaches to the designated temperature, except changing setting temperature.

RA-0927PVU/RA-1227PVU

HEATING MODE OPERATION

- Compressor stops when the room temperature rises to 5.3°C higher than the designated temperature continuously for two minutes.
- Compressor restarts when room temperature falls to +4.7°C of the designated temperature.
- The speed of indoor fan motor is controlled to prevent cold air flow until the indoor heat exchanger gets warm. (see the diagram below)
- The operating frequency of the compressor is determined according to the room temperature (see the diagram below).

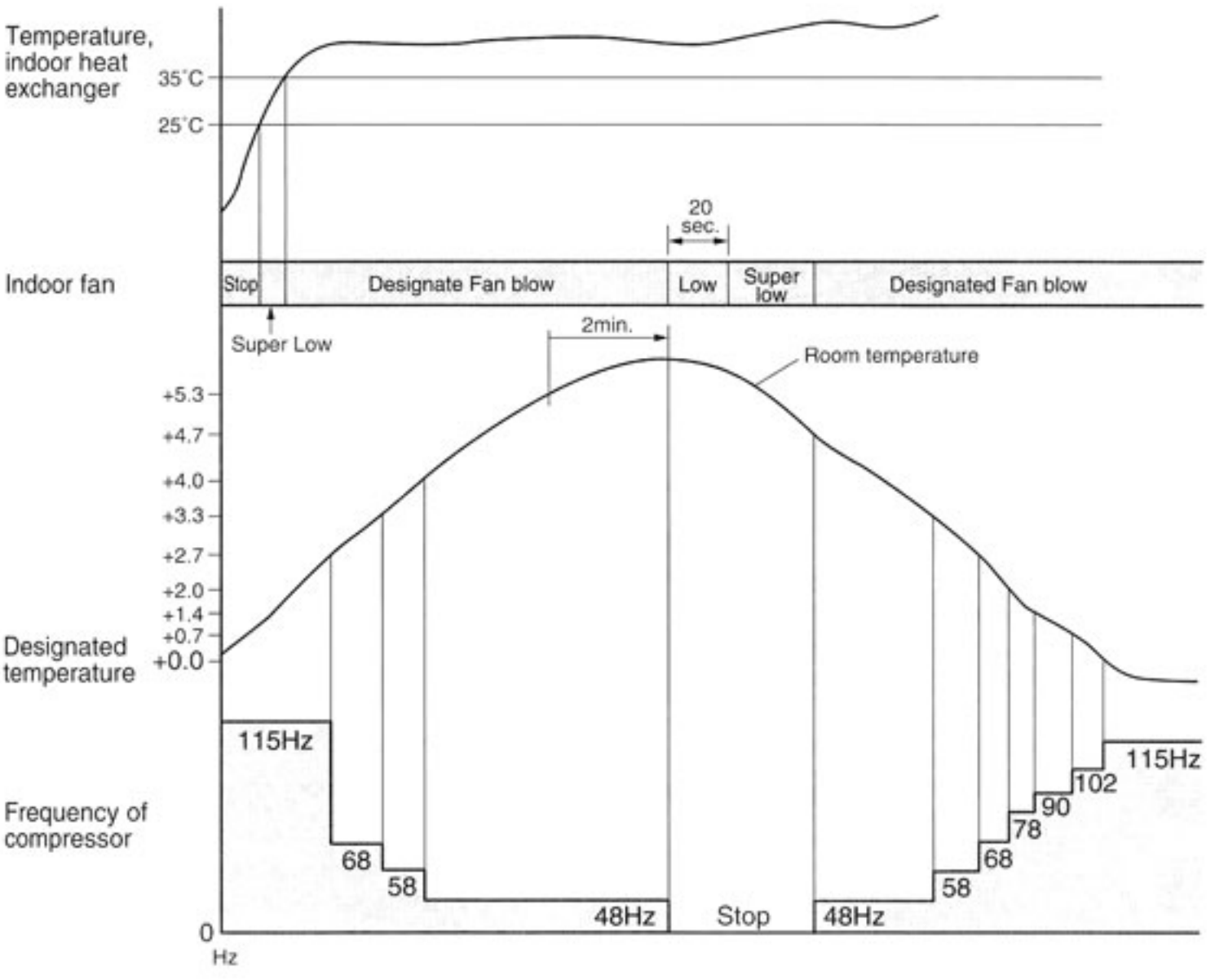

RA-0927PVU/RA-1227PVU

DEFROSTING OPERATION

- Defrosting operation is controlled by the temperature of outdoor heat exchanger sensed by the thermistor and the timer switch.
- Defrosting operation starts when the both of the following conditions are met at the same time.
  a) 42 minutes' of continuous run of the compressor after the start of heating operation or after the completion of previous defrosting operation.
  b) the temperature of the outdoor heat exchanger stays lower than -5°C continuously for two minutes.
- Defrosting operating is called off if either of the following conditions is met.
  a) The temperature of outdoor heat exchanger rises to 8°C while 4-way-valve is ON.
  b) 9 minutes and 30 seconds has passed since compressor turned ON.

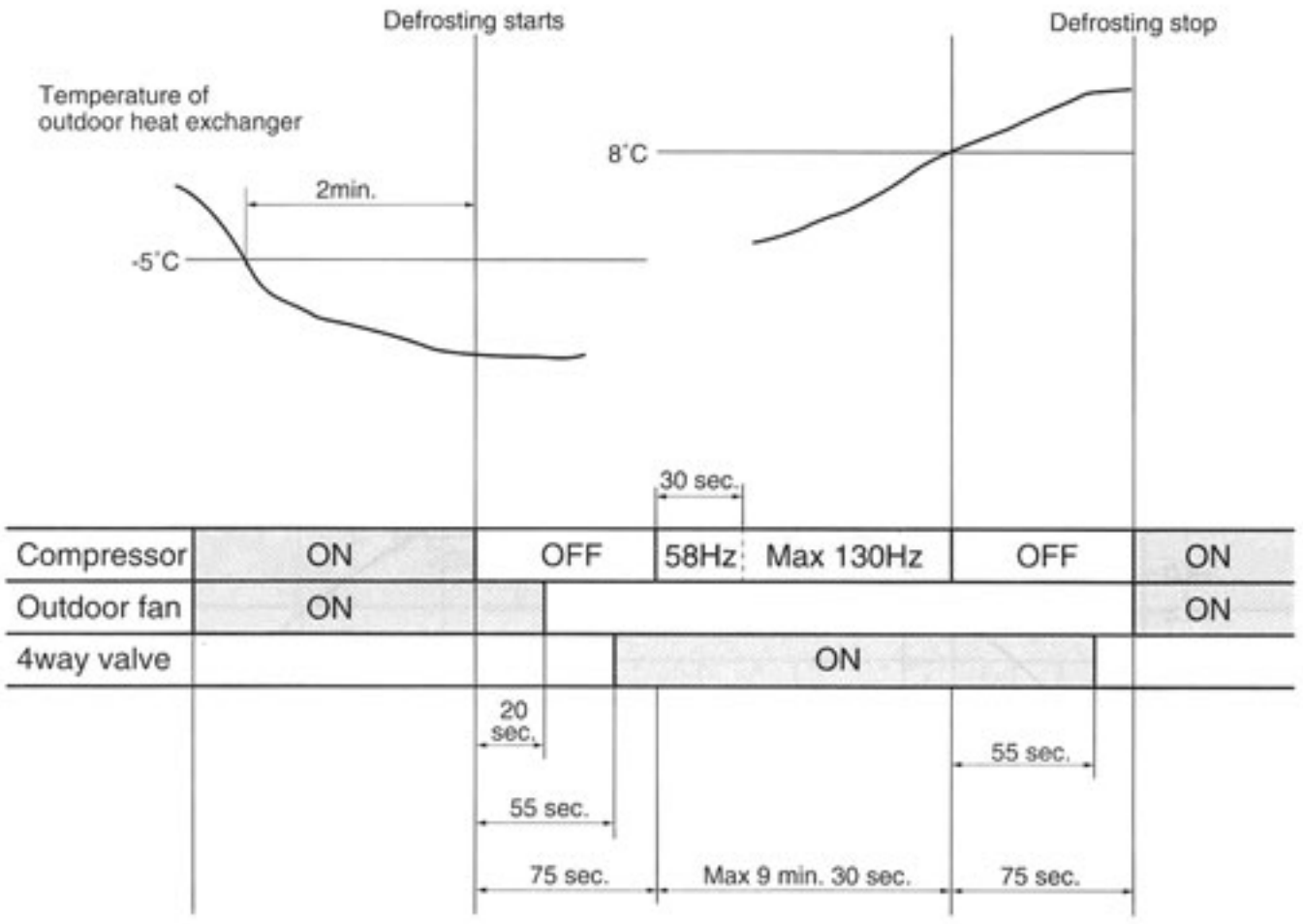

FOR YOUR SAFETY USE

RC : indoor unit AE : outdoor unit

- For the safety and proper use and handling of the product, please read and follow the instructions carefully.
- The meaning of the marks below are as follows.

⚠ Danger	Improper use will cause the significant risk of death or serious injury of the user.
⚠ Warning	Improper use may cause the risk of death or serious injury of the user.

- Please refer the marks below.

⚠	Caution	⚠	High Voltage		Off the Plug	⊘	Prohibited
❗	Strict enforcement	⏚	Connect the earthing cable	⚠	High Temperatare		

⚠ Danger

Check Point	● Be sure to off the plug when servicing. It may cause the risk of electric shock.
	● If leakage of refrigerant occur in the installation, ventilate a room. If the leaked refrigerant is exposed fire, poisonous gas may be generated.
	● Boosting capacitor make the control box assembly (AE unit) high voltage. Make the capacitor discharge enough when servicing. Otherwise will be struck by electricity.
	● Never remodel appliance. Use designated parts or accessories to avoid accidents.
	● In case of gas leakage, not only refill the required amount of the refrigerant gas but also find out the gas leakage point and mend it. If the service work has to be suspended before mending the leakage points, be sure to collect the refrigerant gas in the outdoor unit by using pump then fasten the service ports to avoid any further leakage. Poisonous gas may be generated when the leaked refrigerant is exposed to fire.
	● Clean the pins of the plug and insert the plug completely into the outlet.
	● Be sure to change the cable if it is damaged. Do not use damaged cable.
	● Do not use power supply cord extended or connected in halfway.

⚠ Warning

Check Point	● Be sure to put the units to earthing works.
	● Be sure to check the insulated resistance, more than 1M Ω .

※ The combinations of three LED indicators (ON/Flashing/OFF) provide the self-diagnosis information as most of them shown in the trouble shooting guide.

[Note1] Discharge electricity of the capacitor by making short circuit firstly. Then check the capacitor by tester. Be sure to set up the tester for the measurement of bigger resistance.

RA-0727PU/RA-0927PU/RA-1227PU/RA-1827PU/RA-2427PU

DRY & COOLING OPERATION

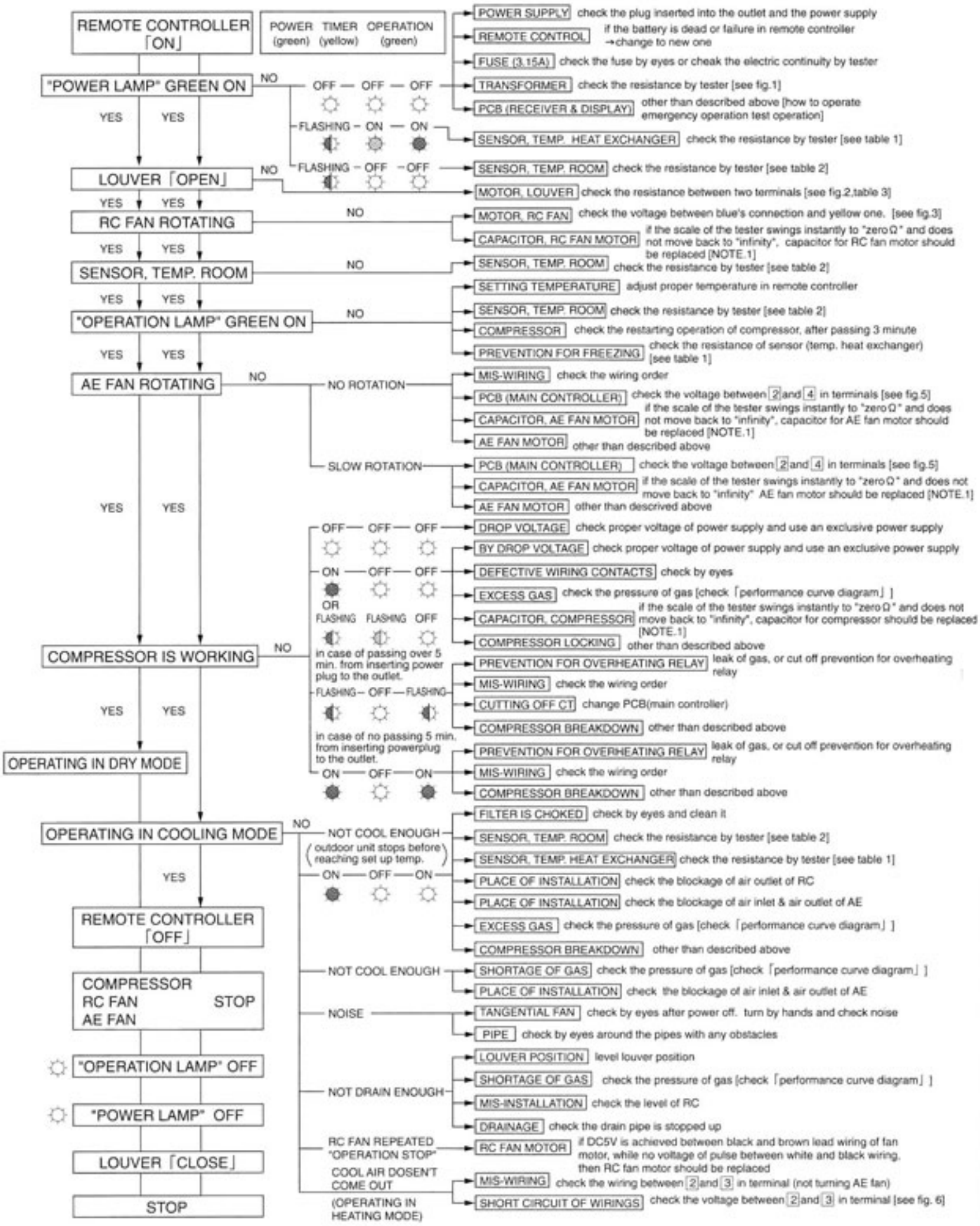

[NOTE.1] Measure the resistance by changing the pole of the tester by turns.

★ 1 ~ 4 Terminal Number on Terminal Block of AE. (outdoor unit)

RA-0727PU/RA-0927PU/RA-1227PU/RA-1827PU/RA-2427PU

HEATING OPERATION

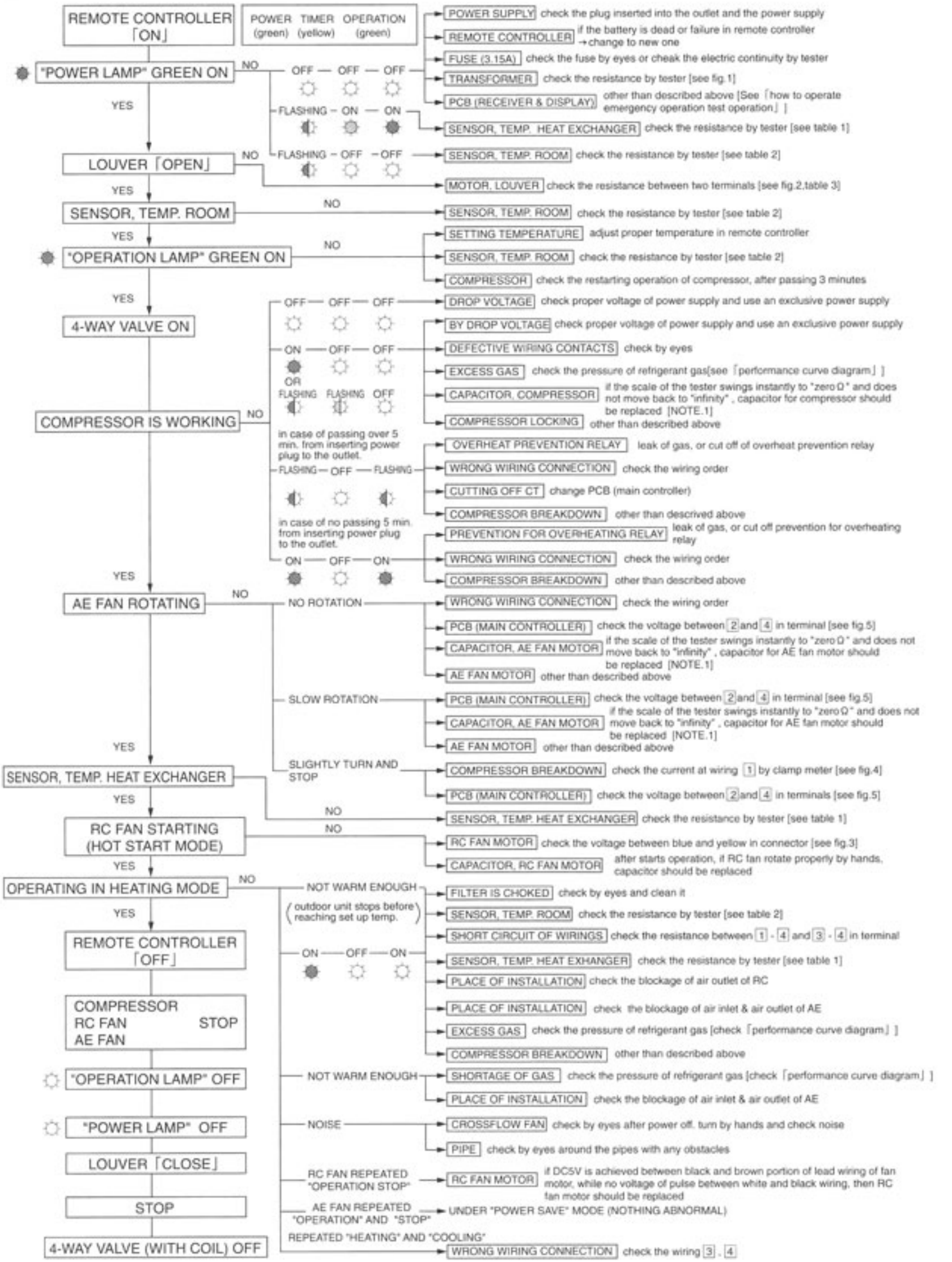

★ 1 ~ 4 Terminal Number on Terminal Block of AE. (outdoor unit)

RA-0927PVU/RA-1227PVU

INDICATION LAMP

Micro computer self-diagnose the points of the troubles and inform it by the combination of the status (On, Flush, or Off) of three lamp indicators on the front panel of the indoor unit.

INDICATION LAMP POWER (green)	TIMER (yellow)	OPERATION (green)	ALARM INDICATION TIME	APPEARANCE, PORTION, PARTS SEEMED WRONG		METHOD OF CHECK (press the ON/OFF button of remote controller in case of reset)
OFF	OFF	OFF			POWER SUPPLY	check the plug inserted into the outlet and the power supply
					REMOTE CONTROL	emergency operation (display of remote controller is faint or not)
					FUSE (3A)	check the electric continuity by tester
					TRANSFORMER	check the resistance by tester [see fig.1]
RC, AE not work at all					RC TERMINAL BLOCK	check the electric continuity by tester
					PCB (RECEIVER & DISPLAY)	emergency operation
					PCB (RC MAIN)	other than described above
FLASHING	OFF	OFF	alarm indication appears immediately when press the operation switch	short or open of sensor, temperature or incomplete insertion of connector	SENSOR, TEMP. ROOM	check the resistance by tester [see table 1]
FLASHING	ON	ON			SENSOR, TEMP. HEAT EXCHANGER	check the resistance by tester [see table 2]
ON	ON	FLASHING			SENSOR, TEMP. DEFROST	check the resistance by tester [see table 2]
FLASHING	ON	OFF			SENSOR, TEMP. DISCHARGE	check the resistance by tester [see table 3]
OFF	OFF	FLASHING	normal lamp indication turn alarm when something is wrong with RC, AE	error of transmission	MIS-WIRING (AE-RC CONNECTING CABLE) OR RARE CONTACT	check the wiring connection and rare contact
RC, AE don't work at all, and after 20 sec., operation lamp is flashing (2 min. in case of power on)					THERE IS SOMETHING NOISY AROUND RC, AE	high-frequency radio, high-frequency generator, and amateur radio
					CURRENT FUSE (25A) FUSING (ON THE PCB (AE MAIN))	accident of rectifier stack or PCB (AE main)
FLASHING	OFF	FLASHING		CT disconnection	CUTTING OFF CT	change the PCB (AE main)
OFF	FLASHING	OFF	once stop running with power lamp lighting when something is wrong with RC, AE, and start running again after 3 ~ 20 min. later after that in case of reoccurrence, alarm indication appears	sensor discharge operate because temperature of discharge tube beyond 120°C, or sensor discharge is bad quality	GAS LEAKAGE	check the point of leakage (discharge temperature rise in case of small leakage), measure the pressure of compressor during fixed operation (operation frequency 58 Hz)
30 ~ 40 min. later after compressor start, the yellow lamp is flashing and RC, AE stop running					VALVE, SERVICE IS CLOSED	check the valve by eyes
					PIPE	check by eyes
					SENSOR, TEMP. DISCHARGE	check the resistance by tester [see table 3]
FLASHING	FLASHING	OFF		protective action against excess current AC current detection	MOMENTARY STOP OF POWER (IN CASE OF LIGHTNING)	check the movement by reoperation
					DROP OF POWER VOLTAGE	check the power voltage (15A)
FLASHING	FLASHING	ON		protective action against excess current DC current detection	UNREASONABLE OPERATION UNDER OVERLOAD	check the place of installation (blockage of air inlet & outlet of RC, AE) check the excess gas
					MOMENTARY STOP OF POWER (IN CASE OF LIGHTNING)	check the movement by reoperation
					DROP OF POWER VOLTAGE	check the power voltage (15A)
					PCB (AE MAIN)	operate without wirings (black, white, red) for compressor if the same alarm appears, PCB (AE main) or power module should be replaced
					ACCIDENT OF POWER MODULE	pull out the wirings for compressor, and check the resistance by tester [see fig.2]
					COMPRESSOR LOCKING	other than described above
FLASHING	FLASHING	FLASHING		in case of heating operation, a rise of temperature (above 62°C) of RC heat exchanger or less quantity of RC blow	FILTER IS CHOKED	check by eyes and clean it
in case of heating operation, after a few minutes operation, all lamps are flashing and RC, AE stop running					SENSOR, TEMP. HEAT EXCHANGER	check the resistance by tester [see table 2]
					PCB (RC MAIN)	check the voltage between blue and yellow in connector [see fig.3] if it is not AC 110V ~ 230V, PCB (RC main) should be replaced
					FAN MOTOR (RC)	other than described above
OFF	FLASHING	FLASHING		rise of temperature of AE controller (a surrounding temperature of AE controller is above 75°C)	SHORT CYCLE (INSUFFICIENT AIR CIRCULATION)	check the blockage of air inlet & outlet of AE
					PCB (AE MAIN)	other than described above
OFF	FLASHING	ON		shortage of voltage	SHORTAGE OF POWER CAPACITY	check the exclusive circuit or thickness of wiring
					MOMENTARY STOP OF POWER (IN CASE OF LIGHTNING)	check the movement by reoperation
FLASHING	ON	FLASHING	15 sec. later after main power on or 20 sec. later after start running through remote controller, alarm indication appears	accident of controller	PCB (RC MAIN)	15 sec. later after main power on, if alarm indication appears, PCB (RC main) should be replaced
					PCB (AE MAIN)	20 sec. later after start running through remote controller, if alarm indication appears, PCB (AE main) should be replaced
				not cool down not warm up	GAS LEAKAGE	check the point of leakage measure the pressure of compressor during fixed operation (operation frequency 58 Hz)
					SENSOR, TEMP. ROOM	check the resistance by tester [see table 1]
					SENSOR, TEMP. HEAT EXCHANGER	check the resistance by tester [see table 2]
					FAN MOTOR (RC)	check the voltage between blue and yellow in connector [see fig.3] if it is AC 110V ~ 230V, RC fan motor should be replaced
					4-WAY VALVE	check the resistance by tester [see fig.4]
					SHORT CYCLE (INSUFFICIENT AIR CIRCULATION)	check the blockage of air inlet & outlet of RC, AE
				water leakage	DRAINAGE	check the drain hose by eyes (it might be folded or choked)
					MIS-INSTALLATION	check the RC whether lean or not
				nasty smell	FILTER IS CHOKED	check by eyes and clean it
					NO USE FOR A LONG TIME	
					NASTY SMELL (CIGARETTE, FURNITURE, ETC.)	use deodorizer

RA-0727PU/RA-0927PU/RA-1227PU

CHECK A FOLLOWING STEPS

〔fig. 1〕 Resistance of transformer

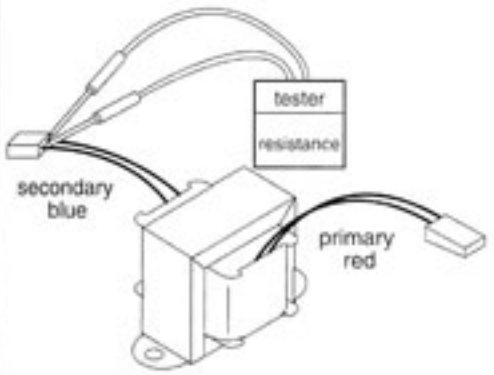

● Transformer resistance

primary red-red	about 800 Ω
secondary blue-blue	about 3 Ω

〈Check the power source〉
The transformer is located in inner part in the control box/
Measure taking off the connectors (primary & secondary)

〔fig. 2〕 Resistance of louver motor

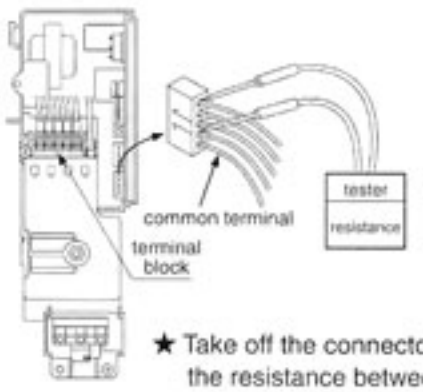

★ Take off the connector and check the resistance between the terminals

〔fig. 3〕 Voltage of RC fan motor

attention
electric shock

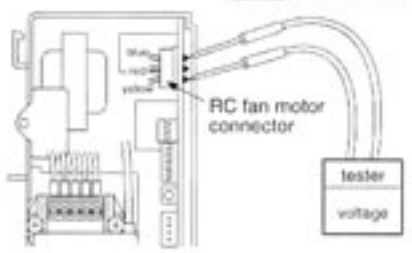

Normal : 110V ~ 230V

〈Check the RC PCB(main controller)〉
Measure the voltage between the connector pins in the back of PCB(main controller)

〔fig. 4〕 Current of compressor (operating in heating mode)

attention
electric shock

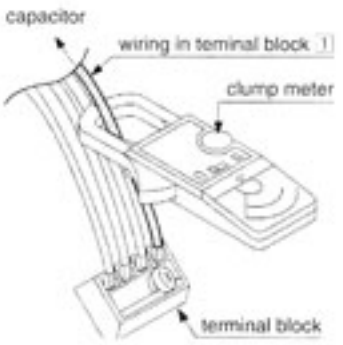

〔table 4〕 Current of wiring in terminal

50Hz	more than about 5 A

※ Check the current of wiring in terminal 1 and if the current stays at the level above shown, compressor is defective. (heating operation only)

〔fig. 5〕 Voltage of PCB (main controller)

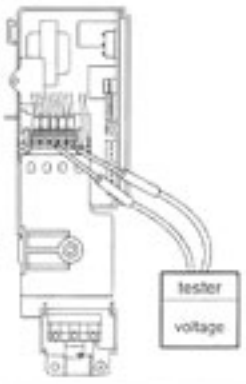

attention
electric shock

★ Check the voltage between 2 and 4 in terminal

Normal : 198V ~ 242V

〔fig. 6〕 Voltage of link line(operation in dry & cooling mode)

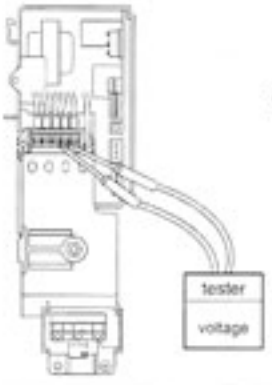

attention
electric shock

★ Check the voltage between 2 and 3 in terminal

Normal : 0V

ELECTRIC CHARACTER

〔table 1〕 Sensor, temp. heat exchanger

Temp. (°C)	Resistance (kΩ)
10	19
15	15
20	12
25	10
30	8
35	7

〔table 2〕 Sensor, temp. room

Temp. (°C)	Resistance (kΩ)
10	47
15	37
20	29
25	23
30	18
35	15

〔table 3〕 Louver motor

Common terminal (lower part) ~ Each terminal
360 ~ 390 Ω
Between terminals
720 ~ 780 Ω

RA-1827PU/RA-2427PU

CHECK A FOLLOWING STEPS

〔fig. 1〕 Resistance of louver motor

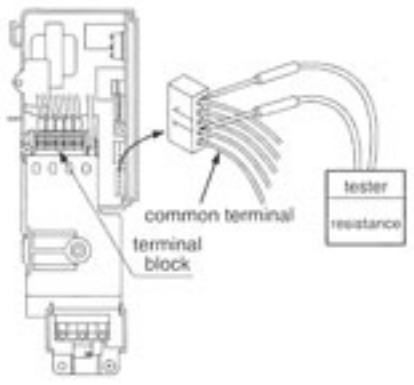

※ Take off the connector and check the resistance between the terminals

〔fig. 2〕 Voltage of RC fan motor

attention electric shock

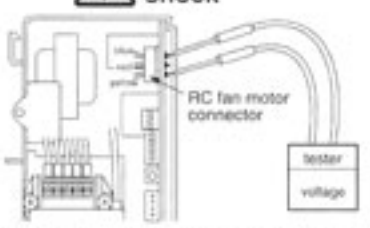

(Check the RC PCB(main controller))
Measure the voltage between the connector pins in the back of PCB(main controller)

110V ~ 230V normal

〔fig.3〕 Current of compressor (operating in heating mode)

RA-2427PU ONLY

attention electric shock

〔table 4〕 Current of wiring in terminal

50Hz	more than about 20 A

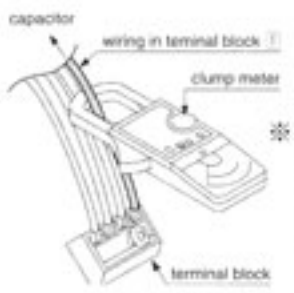

※ Check the current of wiring in terminal 1 and if the current stays at the level above shown, compressor is defective. (heating operation only)

〔fig. 4〕 Voltage of PCB (main controller)

RA-2427PU ONLY

attention electric shock

※ Check the voltage between N and 3 in terminal

Normal : 220V ~ 230V

〔fig. 5〕 Voltage of link line (operation in dry & cooling mode)

attention electric shock

※ Check the voltage between N and 2 in terminal

RA-2427PU ONLY

Normal : 0V

ELECTRIC CHARACTER

〔table 1〕 Sensor, temp. heat exchanger

Temp. (°C)	Resistance (kΩ)
10	19
15	15
20	12
25	10
30	8
35	7

〔table 2〕 Sensor, temp. room

Temp. (°C)	Resistance (kΩ)
10	47
15	37
20	29
25	23
30	18
35	15

〔table 3〕 Louver motor

Common terminal (lower part) ~ Each terminal
200 Ω ± 7%
Between terminals
400 Ω ± 7%

RA-0927PVU/RA-1227PVU

CHECK A FOLLOWING STEPS

〔fig. 1〕 Resistance of transformer

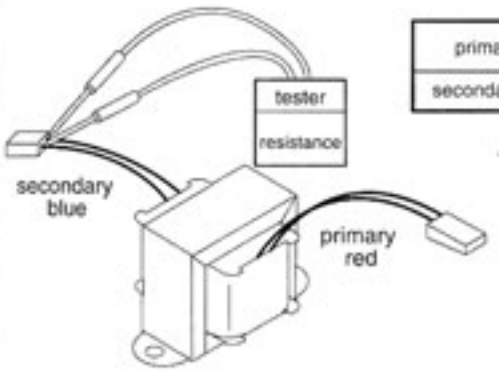

primary red-red	about 800 Ω
secondary blue-blue	about 3 Ω

〈Check the power source〉
The transformer is located in inner part in the control box/ Measure taking off the connectors (primary & secondary)

〔fig. 2〕 Resistance of power module

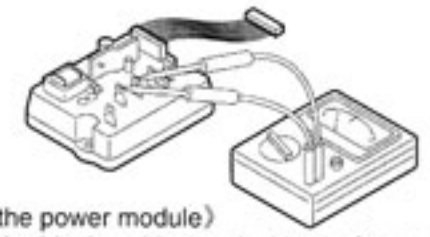

〈Check the power module〉
Pull out the black • white • red wirings of compressor. Measure the resistance, fou six times betoween U-V, V-W, W-U respectively by changing the polarity,and if all the figures show infinite (more than hundreds of k Ω) then it is normal condition.

〔fig. 3〕 Voltage of RC fan motor

attention
electric shock

〈Check the RC PCB (main controller)〉
Measure the voltage between the connector pins in the back of PCB (main controller)

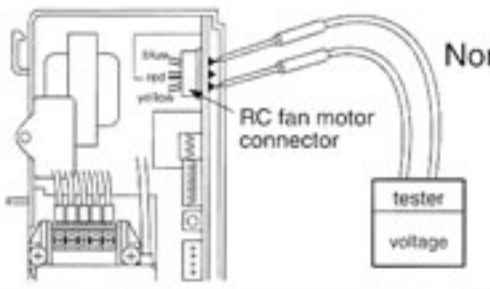

Normal : 110V ~ 230V

〔fig. 4〕 Resistance of 4-way valve coil

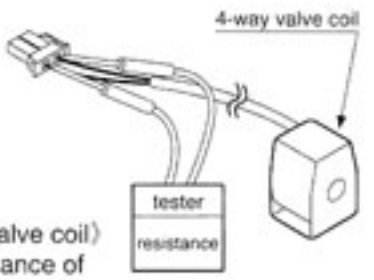

〈Check of 4-way valve coil〉
Measure the resistance of 4-way valve coil.
about 2000 Ω (20°C)

ELECTRIC CHARACTER

〔table 1〕 Sensor, temp. room

Temp. (°C)	Resistance (kΩ)
10	47
15	37
20	29
25	23
30	18
35	15

〔table 2〕 Sensor, temp. defrost
Sensor, temp. heat exchanger
Sensor, temp. outdoor
Sensor, temp. gas pipe
Sensor, temp. suction
Sensor, temp. evaporation

Temp. (°C)	Resistance (kΩ)
0	31
5	24
10	19
15	15
20	12
25	10
30	8
35	7

〔table 3〕 Sensor, temp. discharge

Temp. (°C)	Resistance (kΩ)
10	1,000
20	600
30	400
40	250
50	160
80	50

〔table 4〕

Number of flashing	Defective sensor,temp,	Connector	
1	Sensor, temp. gas pipe for room A	4 pins white connector (brown leads)	see teble 2
2	Sensor, temp. gas pipe for room B	4 pins white connector (brown leads)	see teble 2
3	Sensor, temp. defrost	2 pins white connector	see teble 2
4	Sensor, temp. suction	3 pins red connector	see teble 2
5	Sensor, temp. evaporation	3 pins blue connector	see teble 2
6	Sensor, temp. discharge	3 pins white connector	see teble 3

When some of the sensors, temp. in the outdoor unit are defective, the unit terminates its operation with the condition of 3 LED on the indoor unit as follow:
Power(Green) - Flashing, Timer(Yellow) - Off, Operation(Green) - On.
And the yellow LED(Alarm indicator) on the PCB of the outdoor unit starts to flash. Flashing pattern consists of longer off(3 sec.) and shorter flashing with 0.5 sec. interval. The number of the shorter flashing depends of the kind of defective sensor, temp. in the outdoor unit.(Refer to Teble 4).

DISPLAY OF ERRORS IN THE PAST

- Push emergency operation switch and hold for more than 10 seconds while unit is not operated and release the switch when you hear three beeps.
  You will see the latest error by indication lamp.
  Further pushing of the switch will make the error indication by reversing cycle up to four latest errors in the past.
  At any stage, the error indication will disappear after 30 seconds.

Hold switch for more than 10 seconds	Three beeps	The latest error indication
Another push	Two beeps	The second latest error indication
Another push	Three beeps	The third latest error indication
Another push	Four beeps	The fourth error indication
Another push	One beeps	Indication lamp goes off

RA-0727PU/RA-0927PU/RA-1227PU

HOW TO DETACH CONTROL BOX AND MAIN CONTROLLER

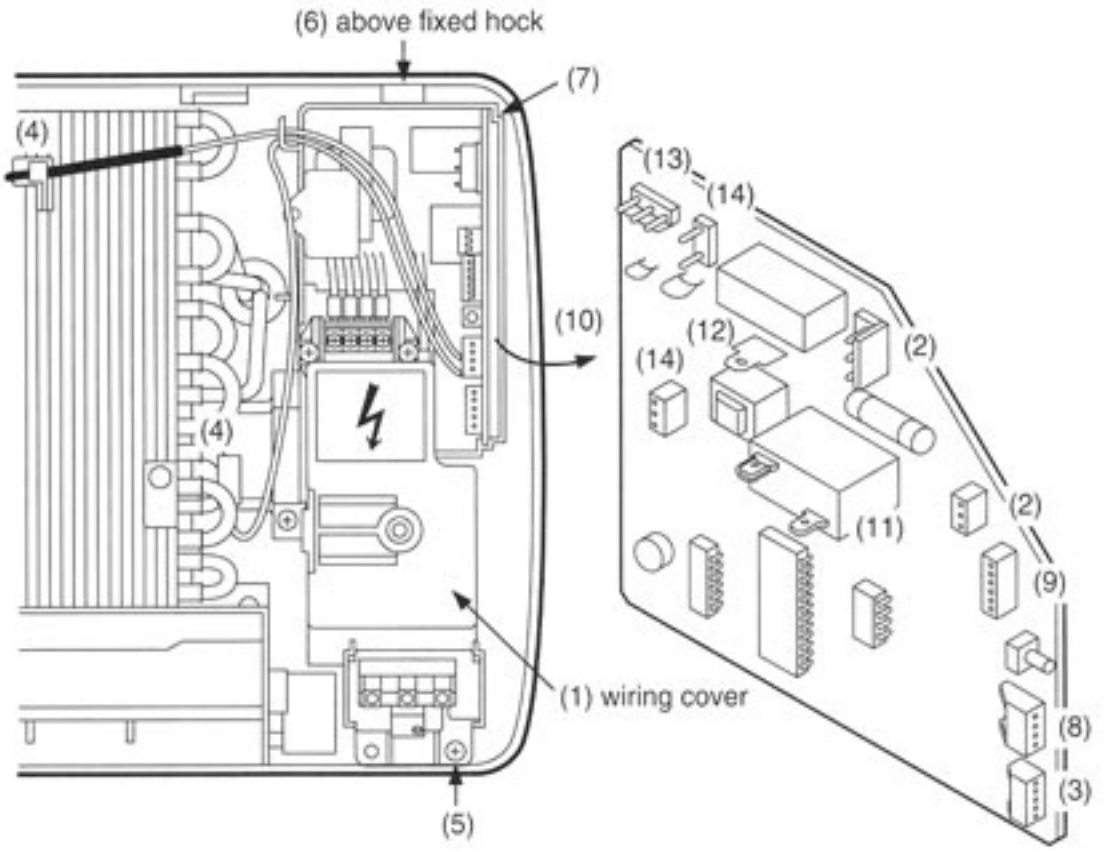

★ The drawing of Model RA-1227PU is different from above mentioned illustration.

《How to detach control box assembly》

(1) Detach wiring cover and pull out connecting cables.
(2) Pull out connector of RC fan motor.
(3) Pull out connector of louver motor.
(4) Detach sensors (room+heat exchanger) and earthing screws.
(5) Detach a screw for PCB casing.
(6) Shift control box assembly below and detach above fixed hock.
(7) Draw out the whole control box assembly for this side.

《How to detach PCB (main controller)》

(8) Pull out connector of sensors (room+heat exchanger).
(9) Pull out connector of PCB (receiver & display).
(10) Pull out PCB (main controller) from control box assembly for this side.
(11) Pull out terminal with pushing locking lever simultaneously.
(12) Pull out terminal with pushing locking lever simultaneously.
(13) Pull out connector from terminal block to PCB (main controller).
(14) Pull out connector of transformer.

WIRING DIAGRAM

RC-0727PU/RC-0927PU/RC-1227PU

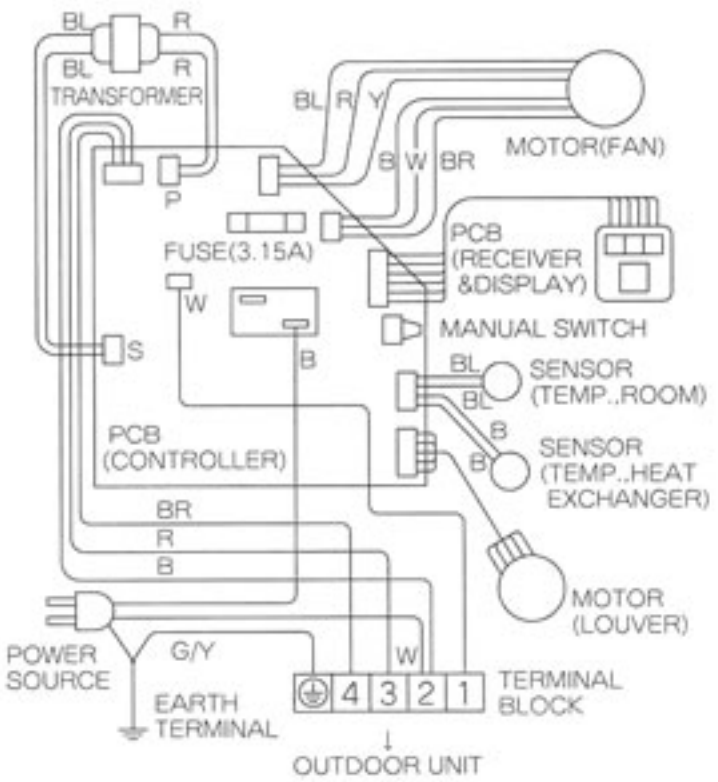

RC-1827PU/RC-2427PU

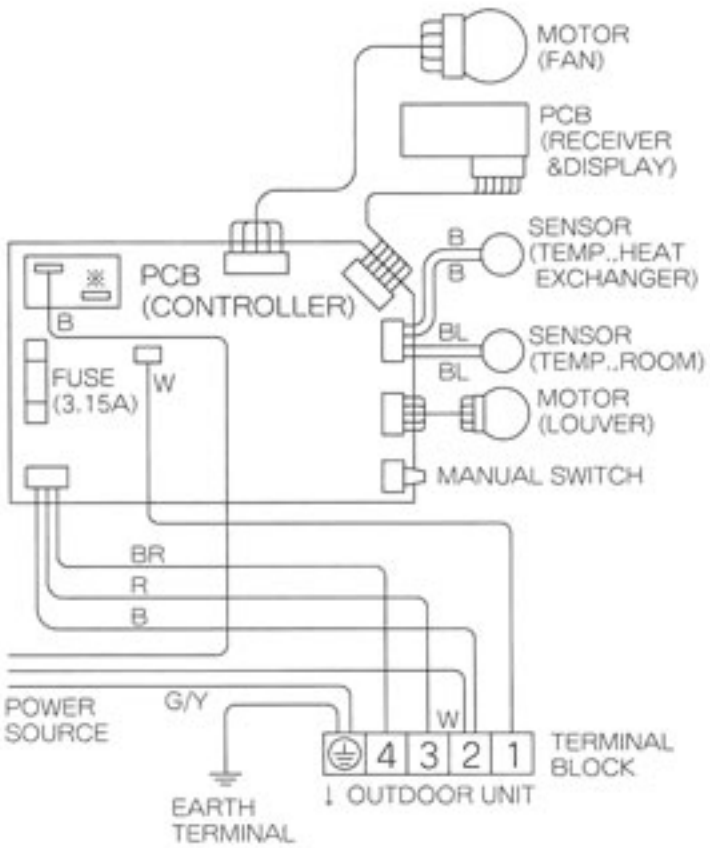

AE-0727PU

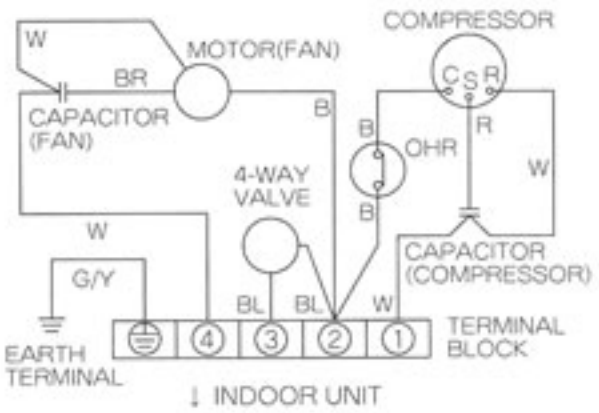

AE-0927PU

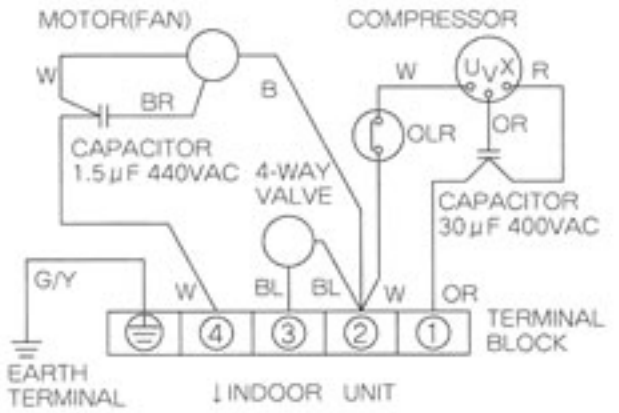

RC:INDOOR UNIT
AE:OUTDOOR UNIT

B :BLACK
BL :BLUE
BR :BROWN
G :GREEN
OR :ORANGE
R :RED
W :WHITE
Y :YELLOW

WIRING DIAGRAM

AE-1227PU

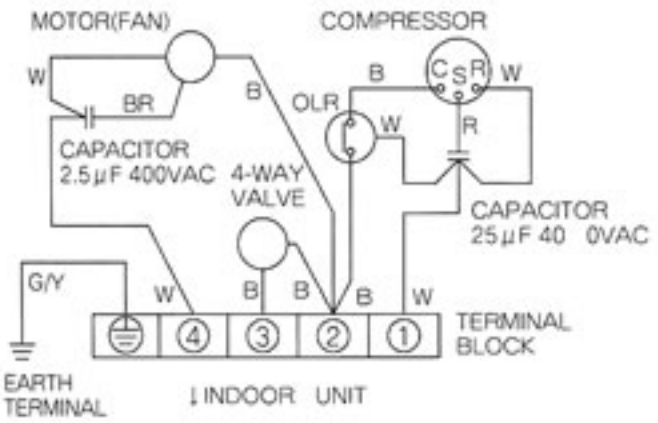

AE-2427PU

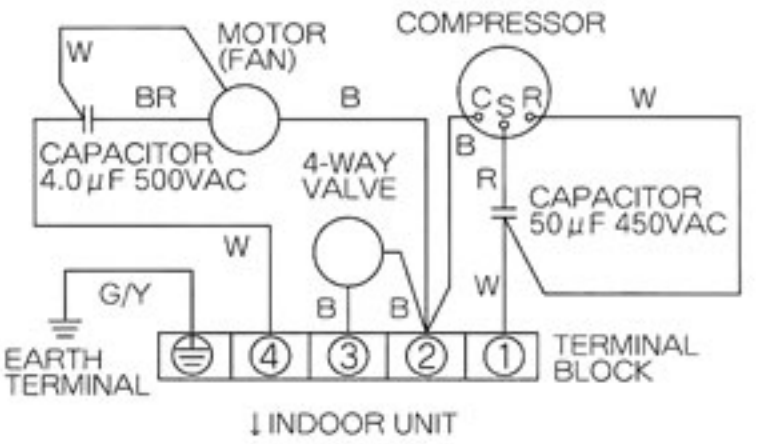

AE-1827PU

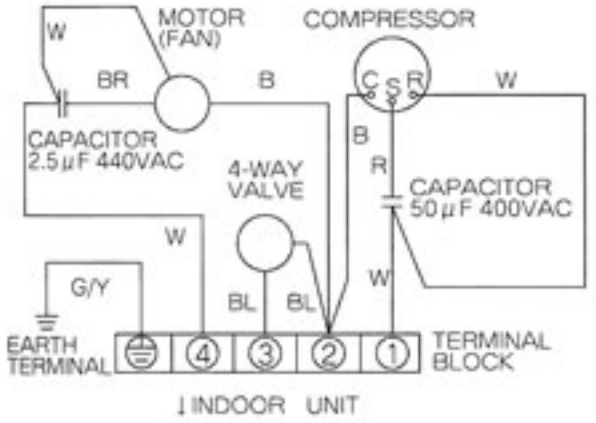

AE:OUTDOOR UNIT

B :BLACK
BL:BLUE
BR:BROWN
G :GREEN
R :RED
W :WHITE
Y :YELLOW

RA-0927PVU/RM-1227PVU

HOW TO DETACH CONTROL BOX AND MAIN CONTROLLER

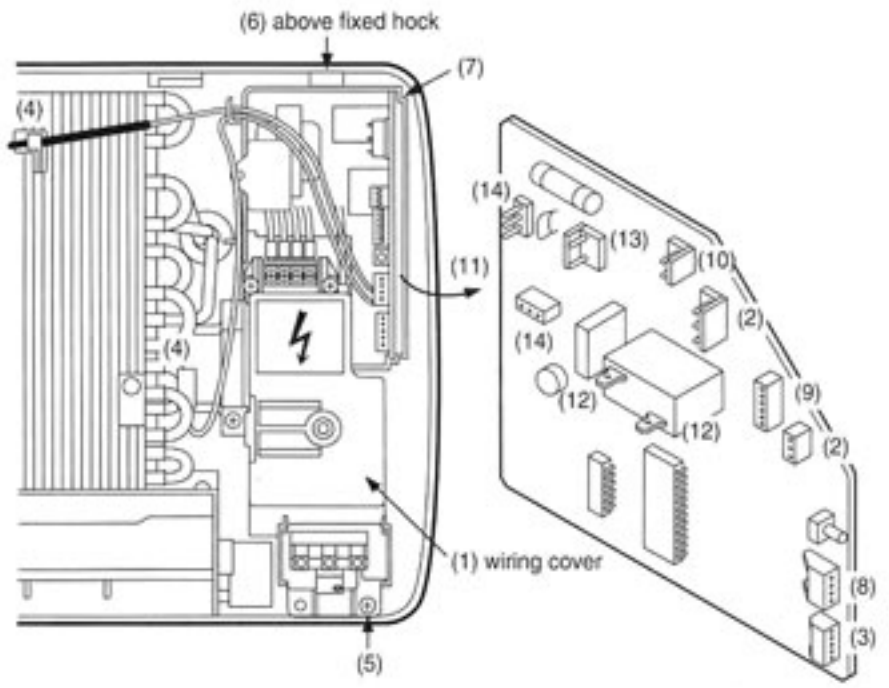

《How to detach control box assembly》

(1) Detach wiring cover and pull out connecting cables.
(2) Pull out connector of RC fan motor.
(3) Pull out connector of louver motor.
(4) Detach sensors (room+heat exchanger) and earthing screws.
(5) Detach a screw for PCB casing.
(6) Shift control box assembly below and detach above fixed hock.
(7) Draw out the whole control box assembly for this side.

《How to detach PCB (main controller)》

(8) Pull out connector of sensors (room+heat exchanger).
(9) Pull out connector of PCB (receiver & display).
(10) Pull out conector of capacitor.
(11) Pull out PCB (main controller) from control box assembly for this side.
(12) Pull out terminal with pushing locking lever simultaneously.
(13) Pull out connector from terminal block.
(14) Pull out connector of transformer.

WIRING DIAGRAM

RC-0927PVU/RC-1227PVU

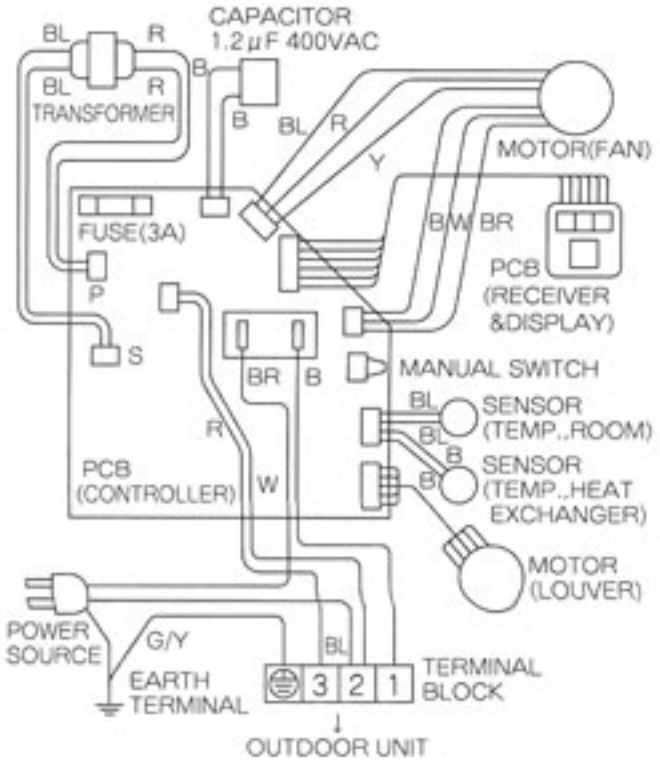

RC:INDOOR UNIT

B :BLACK
BL :BLUE
BR:BROWN
G :GREEN
R :RED
W :WHITE
Y :YELLOW

AE-0927PVU/AE-1227PVU

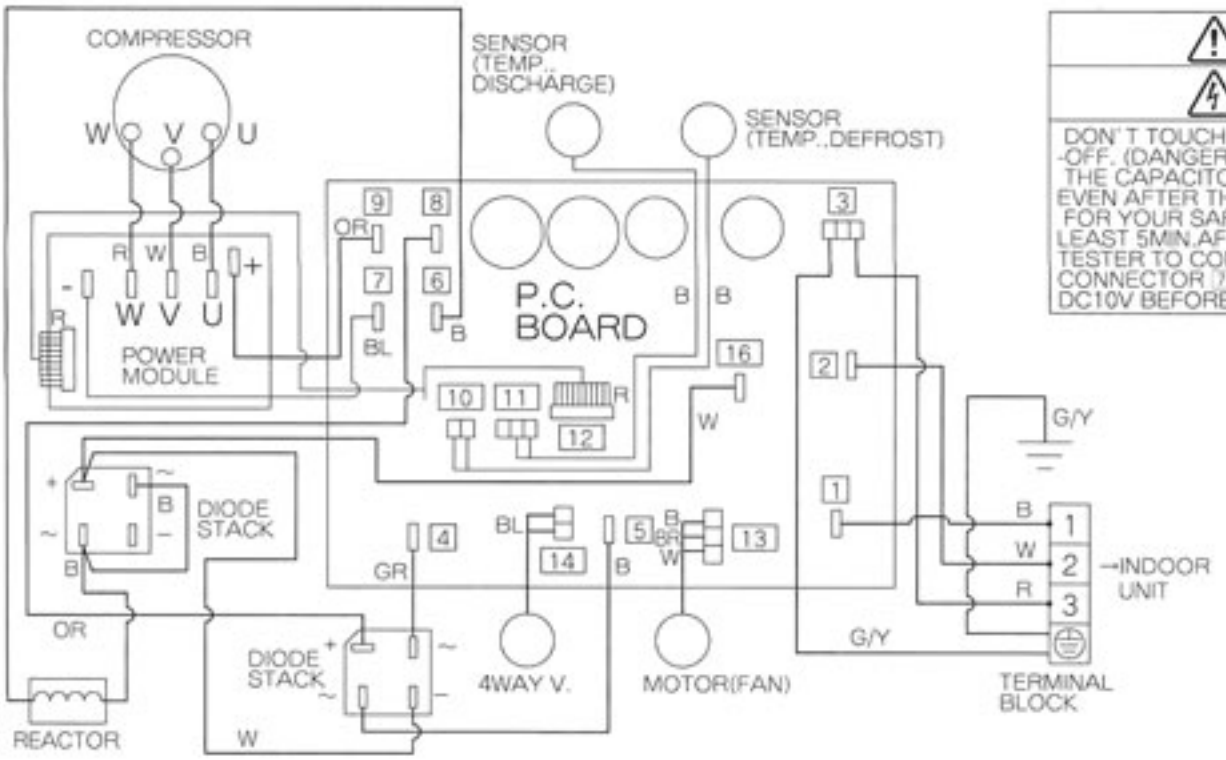

⚠ WARNING!

⚠ CAUTION!

DON' T TOUCH CAPACITOR.EVEN AFTER PLUG -OFF. (DANGER OF ELECTRIC SHOCK)
THE CAPACITOR RETAINS HIGH VOLTAGE EVEN AFTER THE PLUG-OFF.
FOR YOUR SAFETY, BE SURE TO WAIT AT LEAST 5MIN.AFTER PLUG OFF AND USE A TESTER TO CONFIRM THE VOLTAGE BETWEEN CONNECTOR [7] ⊖ AND [9] ⊕ IS LESS THAN DC10V BEFORE START SERVICING.

AE:OUTDOOR UNIT

B :BLACK
BL :BLUE
BR:BROWN
G :GREEN
GR:GRAY
OR:ORANGE
R :RED
W :WHITE
Y :YELLOW

RA-0927PU(OLR)
RA-1827PU/RA-2427PU(INNER PROTECTOR)

OVERHEAT PREVENTIVE RELAY(OLR,INNERPROTECTOR)

OLR

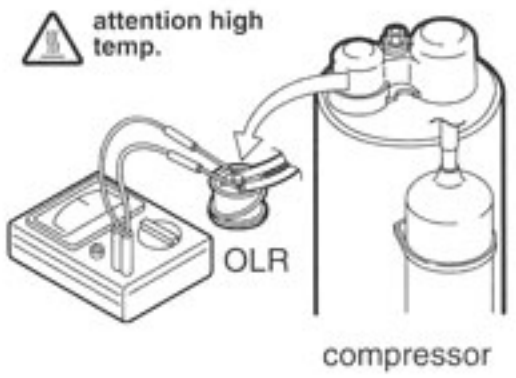

INNERPROTECTOR

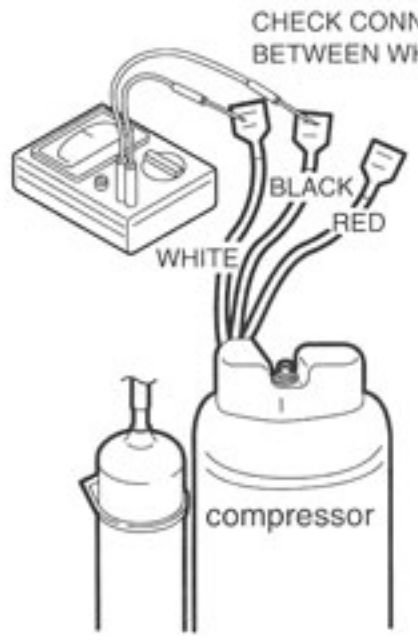

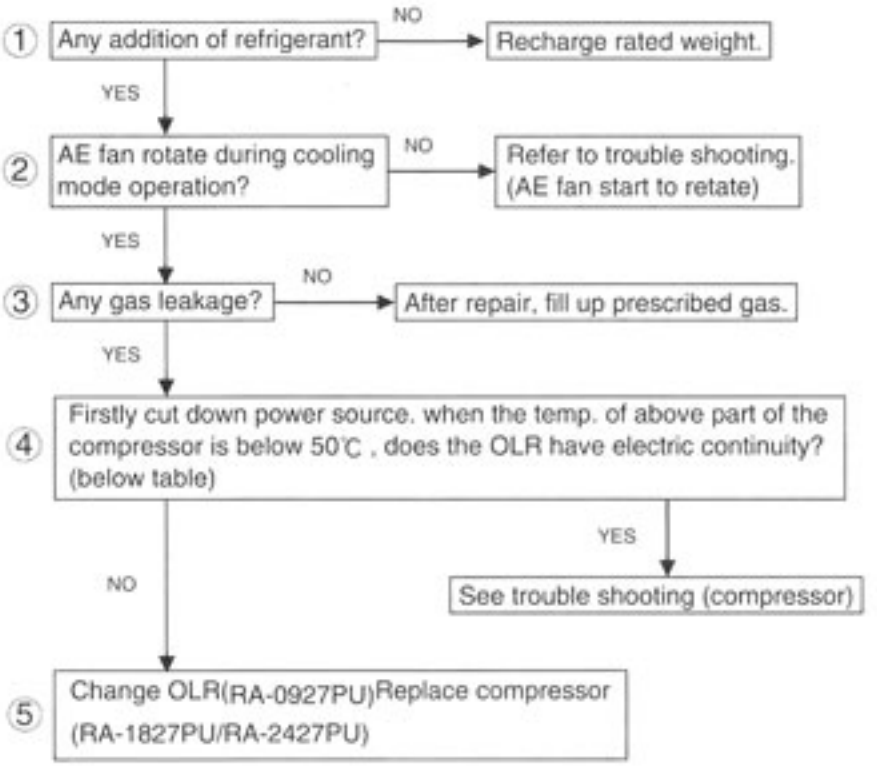

Phenomenon	OLR/INNERPROTECTOR works
Cause	① Excesive refrigerant ② AE fan does not rotate ③ Gas leakage ④ OLR is defective ⑤ Compressor does not operate

RA-0727PU/RA-1227PU

OVERHEAT PREVENTIVE RELAY(OHR)

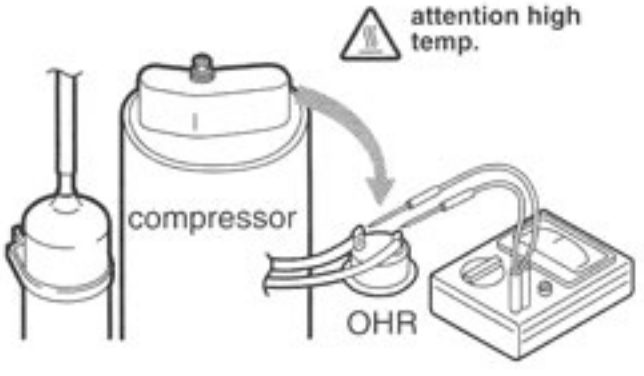

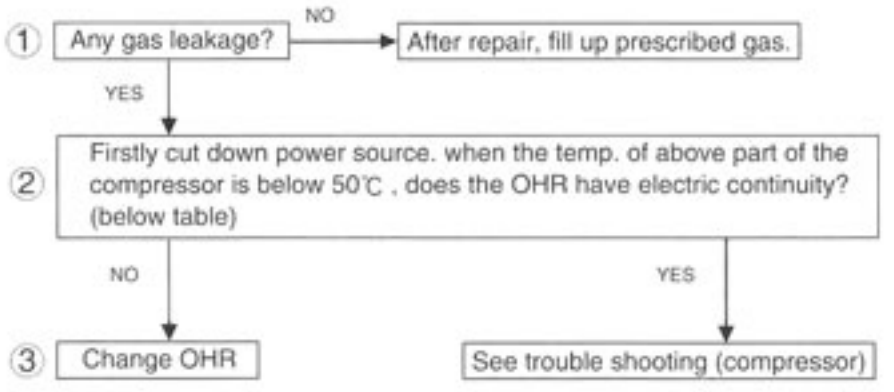

Phenomenon	OHR works
Cause	① Gas leakage ② OHR is defective

REMARKS FOR GAS PRESSURE CHECK AND CHARGING

Gas pressure is to be measured at COMPULSORY COOLING OPERATION for cooling or EMERGENCY OPERATION for heating. (It is operated for 30 minutes at 58Hz fixed frequency.)
If you find substantial diffrence in performance compared with PERFORMANCE CURVE as shown above, recharge the refrigerant.
(In order to avoid excessive charging purge all the remaining refrigerant first and then evacuate the unit completely with vacuum pump and finally apply rated volume charging of refrigerant.)
Charging of refrigerant should be done by cooling operation, because the pressure at service valve will be too high at heating cycle, then the heating performance characteristics must be checked by restarting of heating operation.

Model		7k~12k BTU 18k BUT multi	18k BTU	24k BTU	9k~12k BTU Inverter	14k BTU Inverter multi
Piping size	Liquid side	6.35mm	6.35mm	6.35mm	6.35mm	6.35mm
	Gas side	9.52mm	12.7mm	15.88mm	9.52mm	9.52mm
Max. tube length		10m	10m	10m	15m	*20m
Max. height difference		5m	5m	5m	10m	*10m

When the piping is longer than 7 meters, be sure to add a following charge of refrigerant.
Additional volume of refrigerant charged = (pipng length - 5m) x 20g
* : Total length of pipe for both units shall not exceed 30 m.
Vertical height difference between each indoor units shall not exceed 10 m.

PERFORMANCE CURVE DIAGRAM

RA-0727PU

COOLING

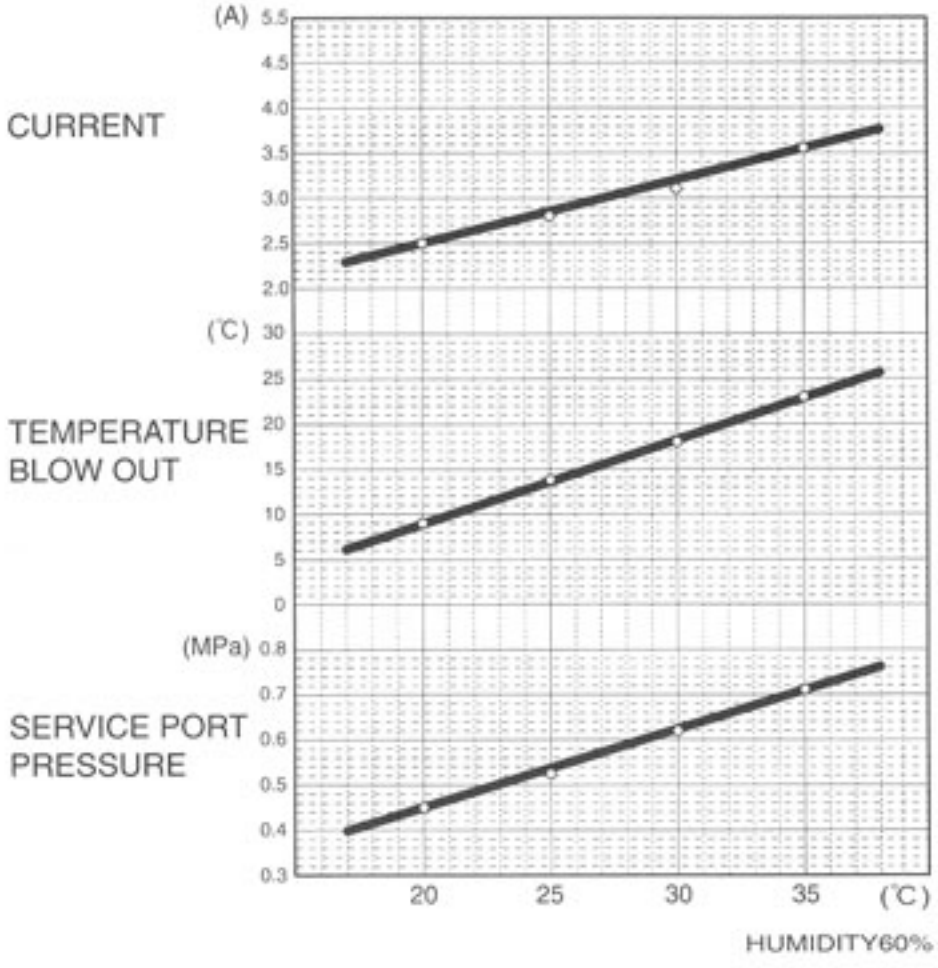

AIR TEMPERATURE INDOOR-OUTDOOR

HEATING

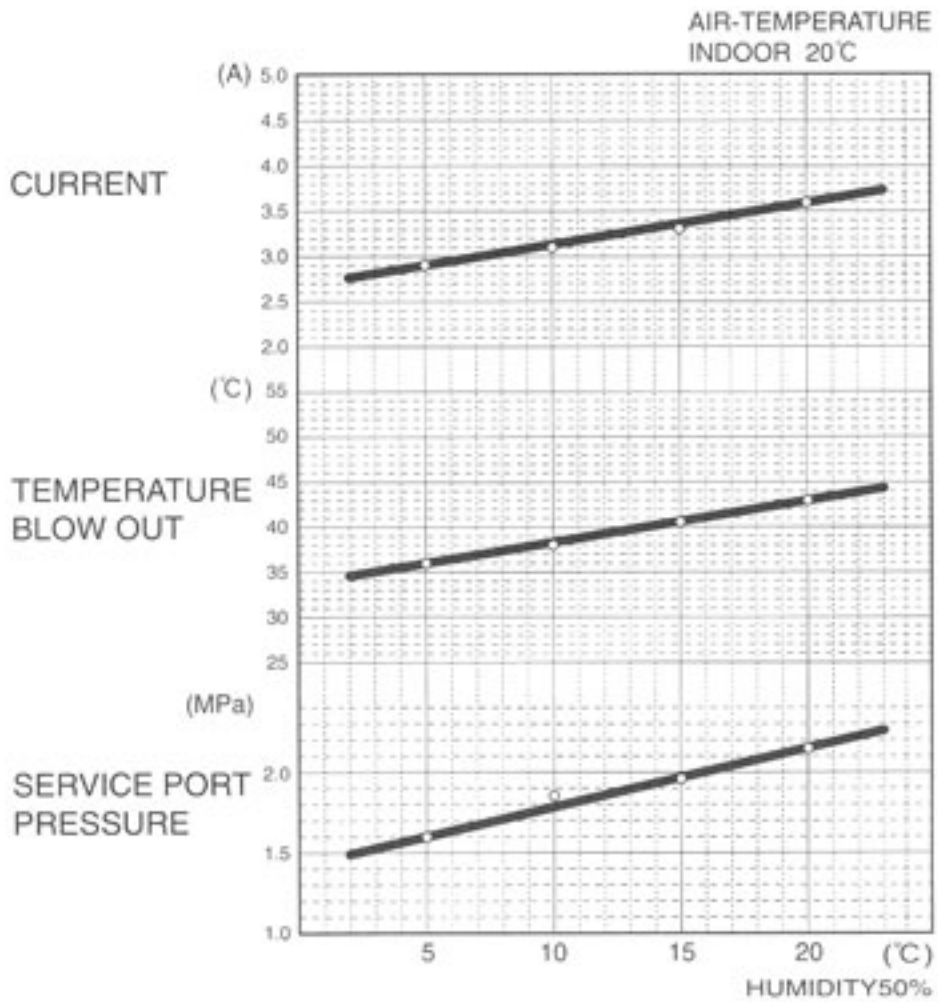

AIR TEMPERATURE-OUTDOOR

PERFORMANCE CURVE DIAGRAM

RA-0927PU

COOLING

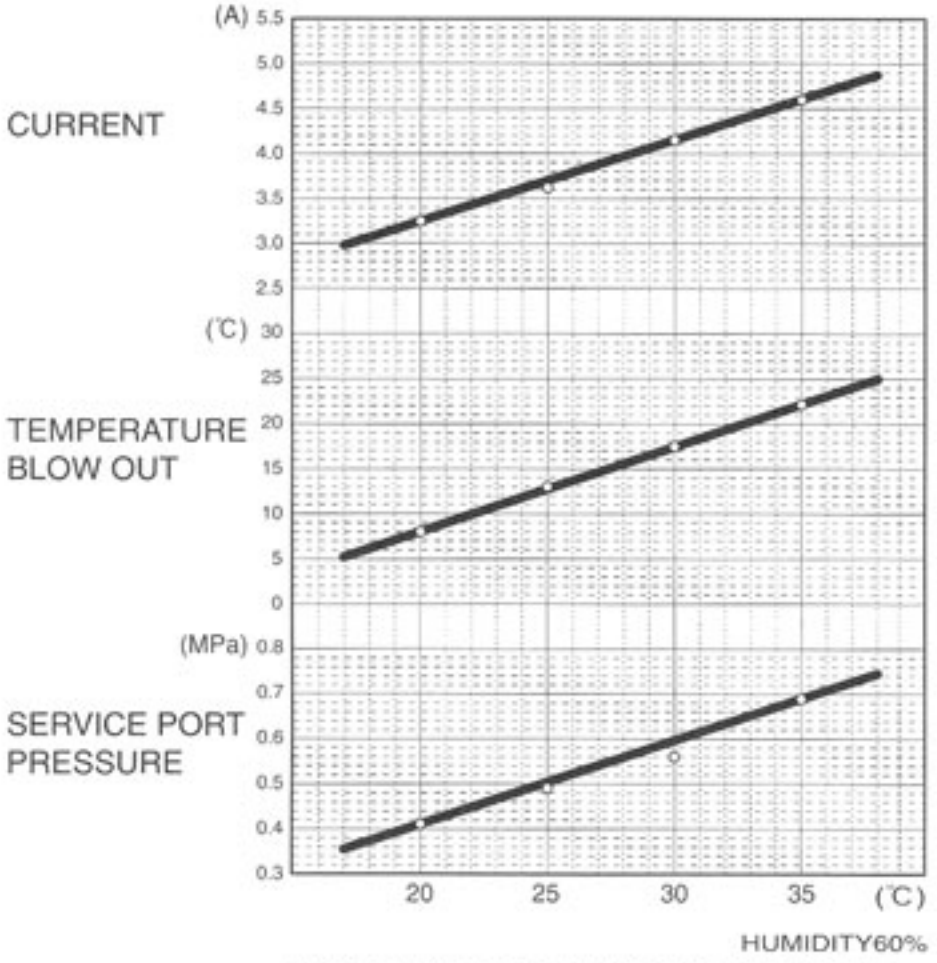

HEATING

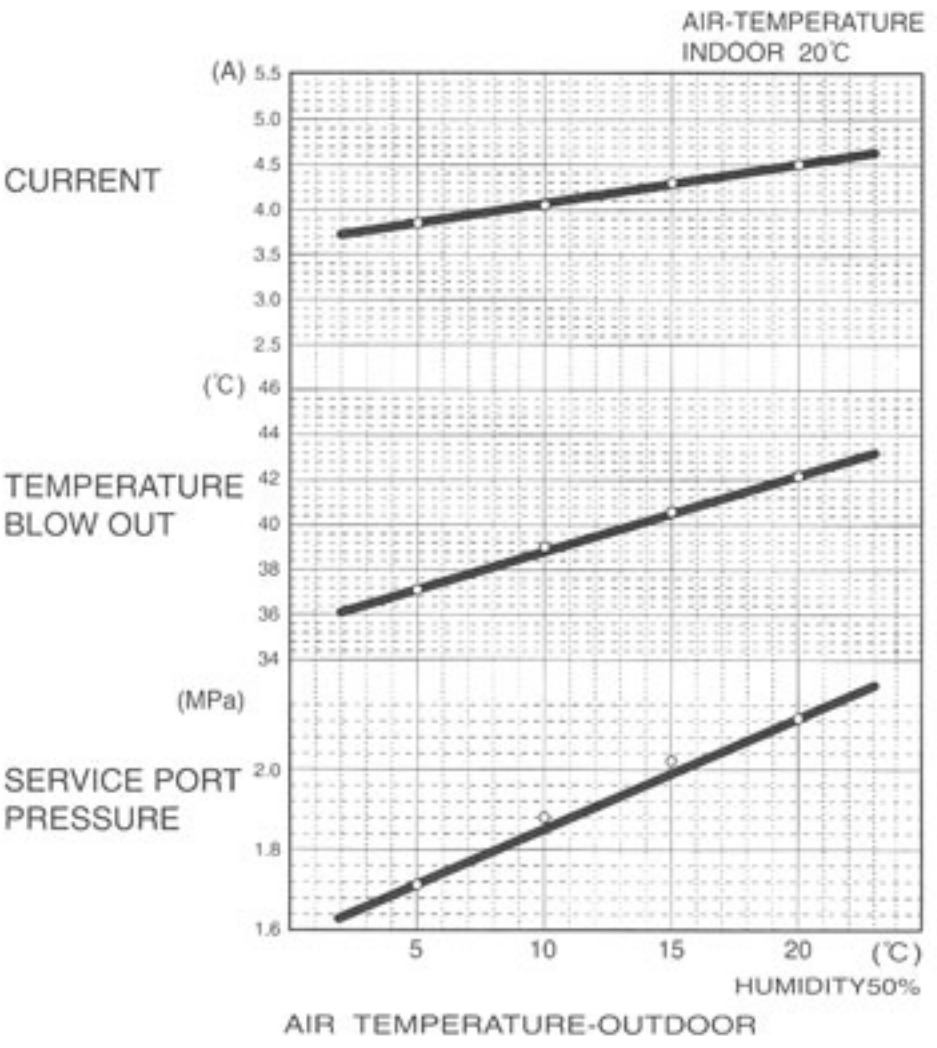

PERFORMANCE CURVE DIAGRAM

RA-1227PU

COOLING

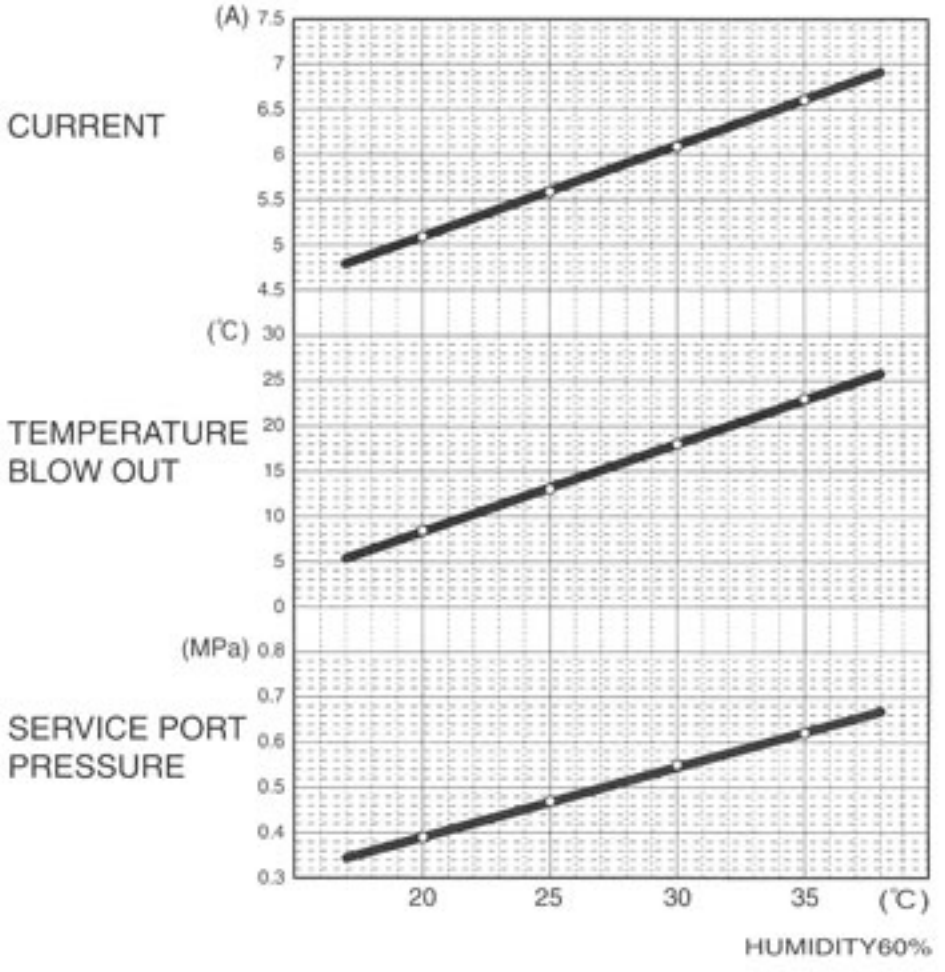

HEATING

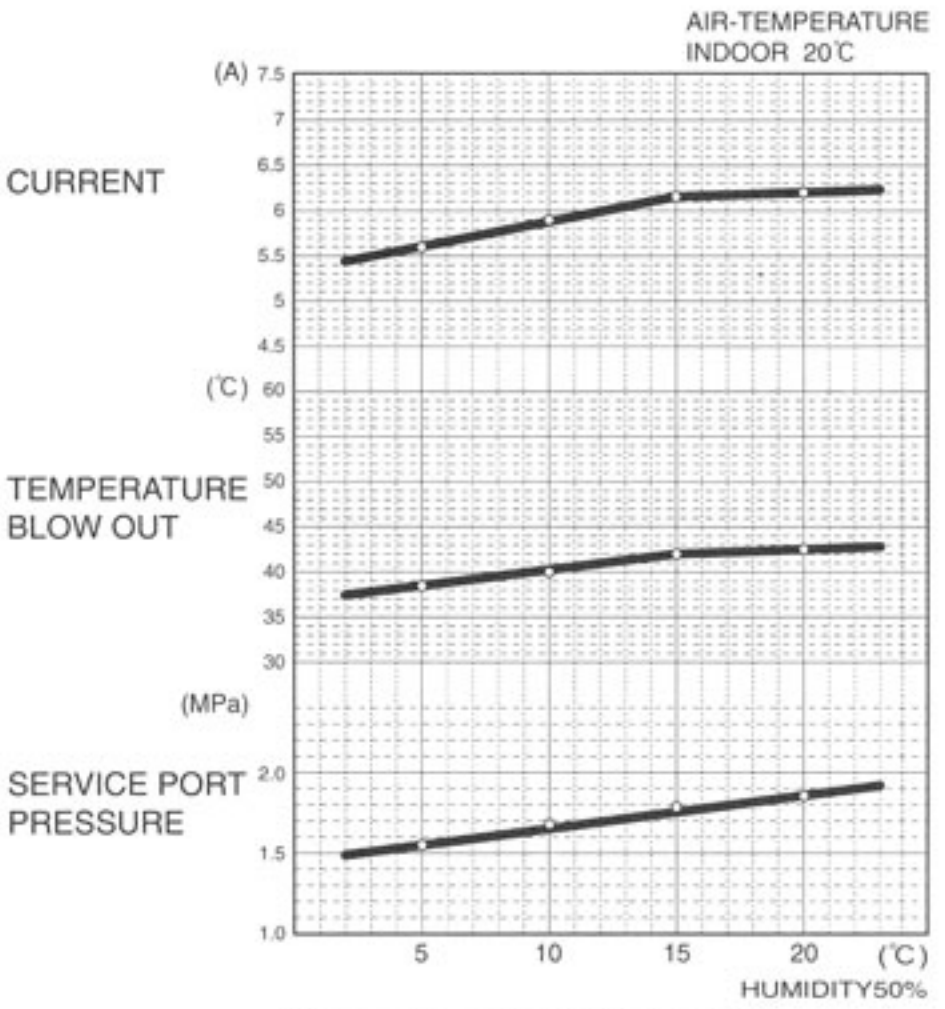

PERFORMANCE CURVE DIAGRAM

RA-1827PU

COOLING

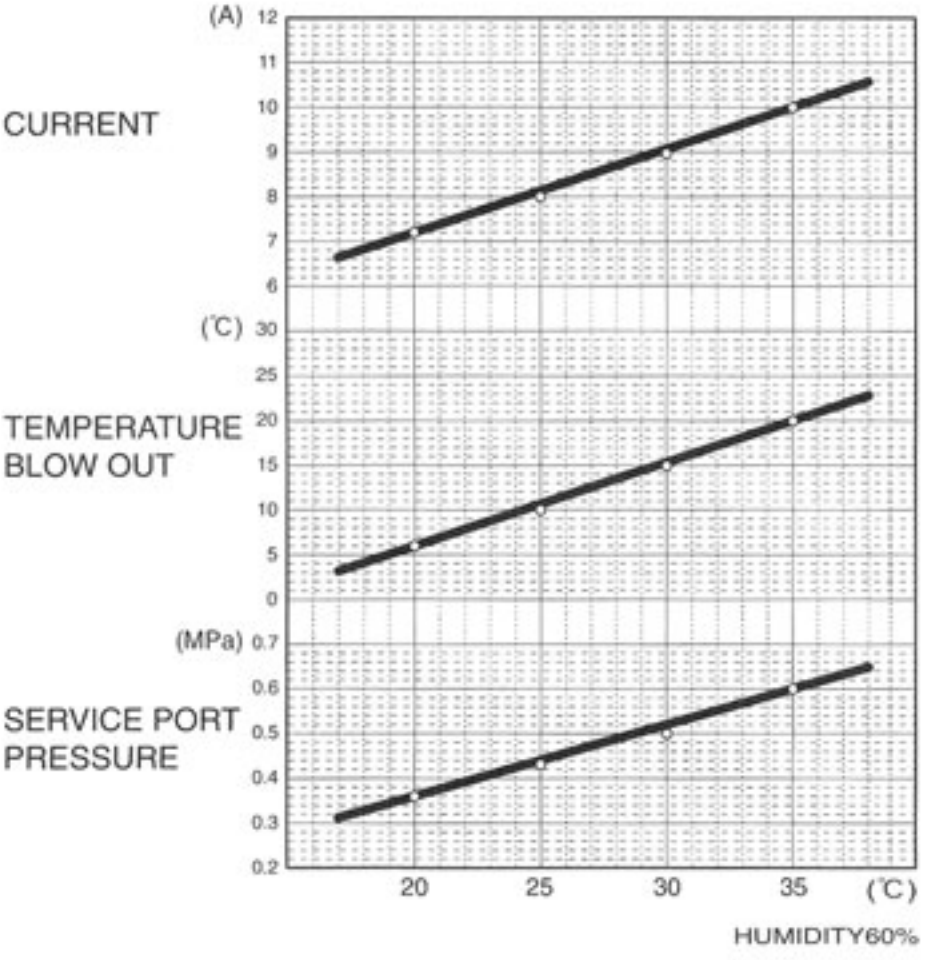

HEATING

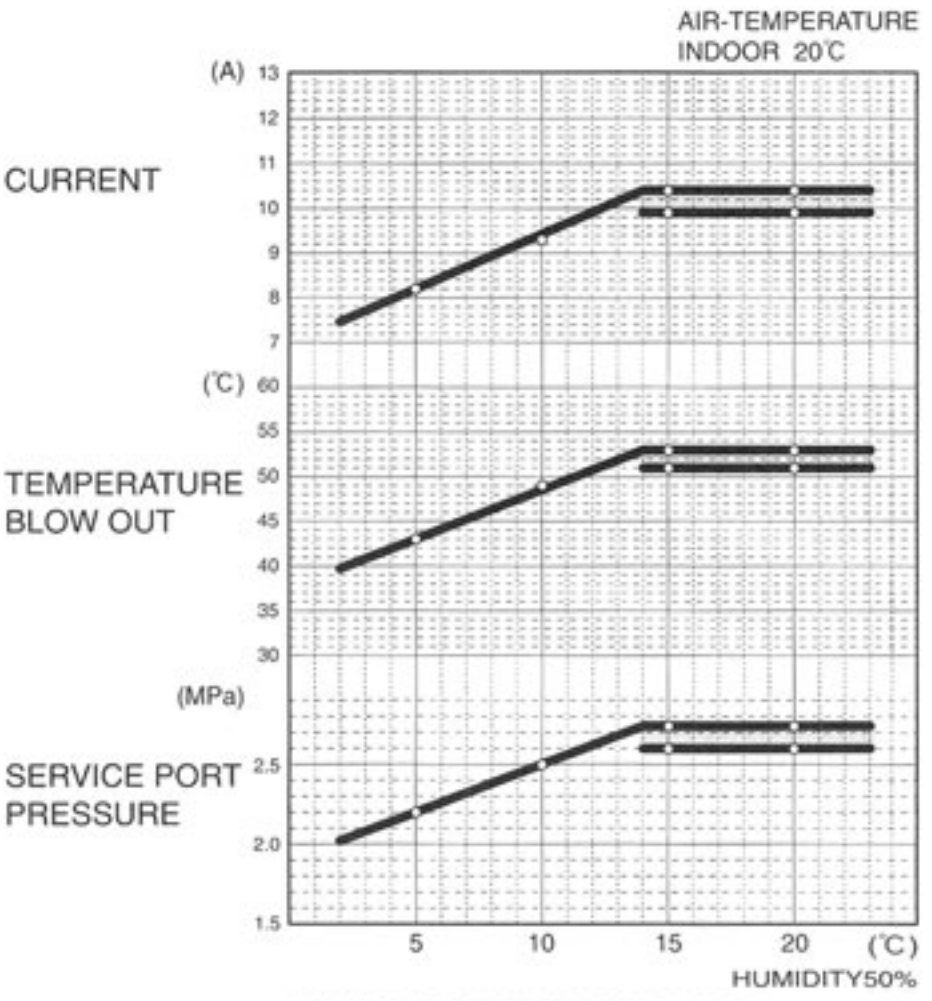

PERFORMANCE CURVE DIAGRAM

RA-2427PU

COOLING

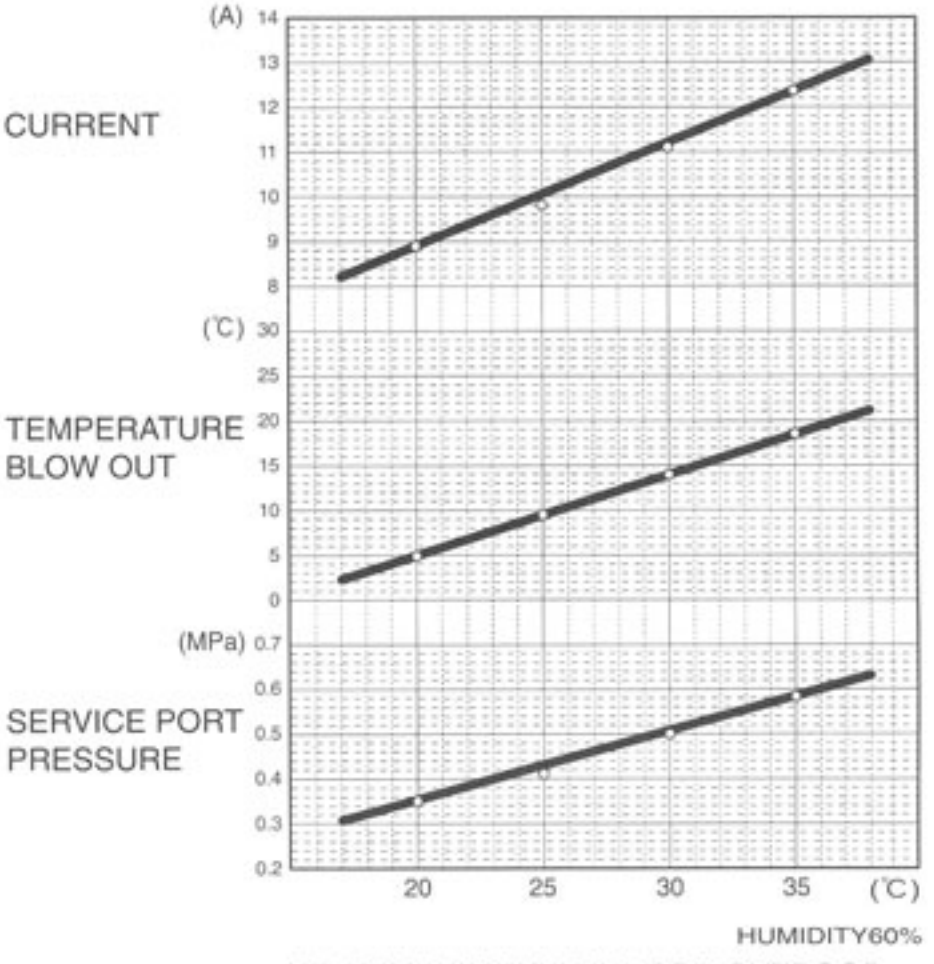

HEATING

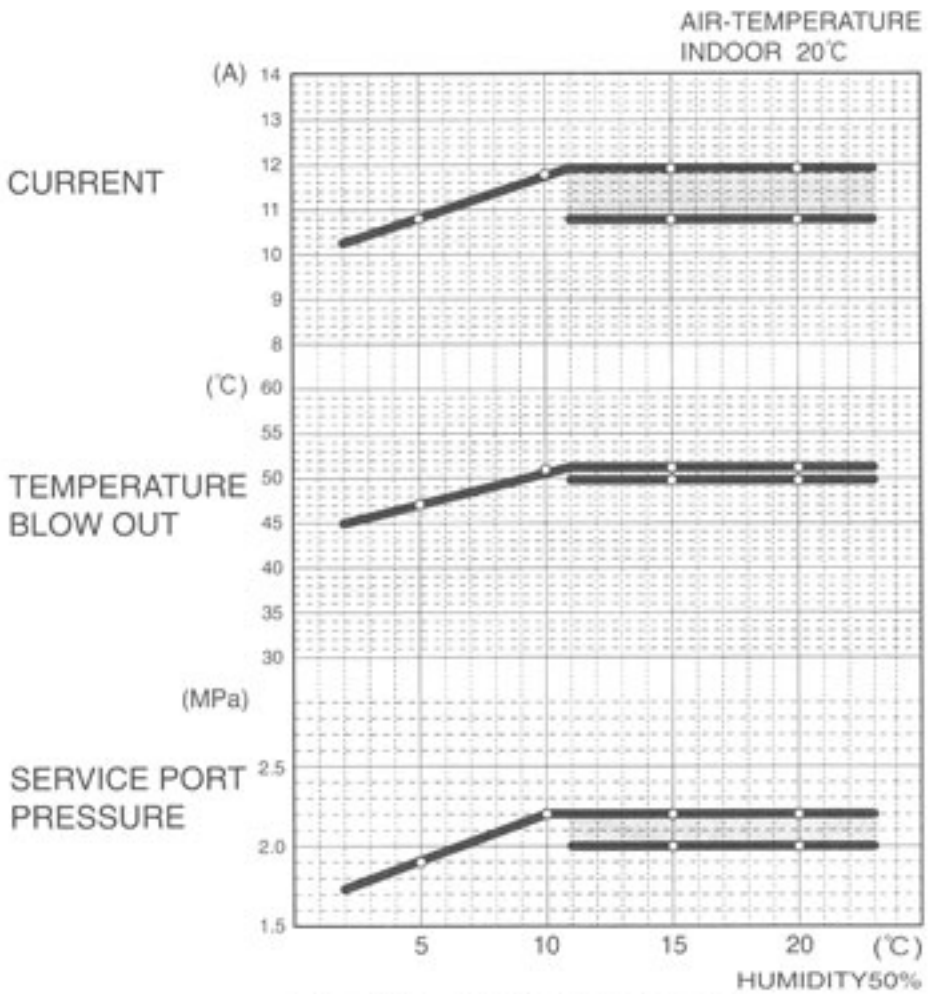

PERFORMANCE CURVE DIAGRAM

RA-0927PVU

COOLING

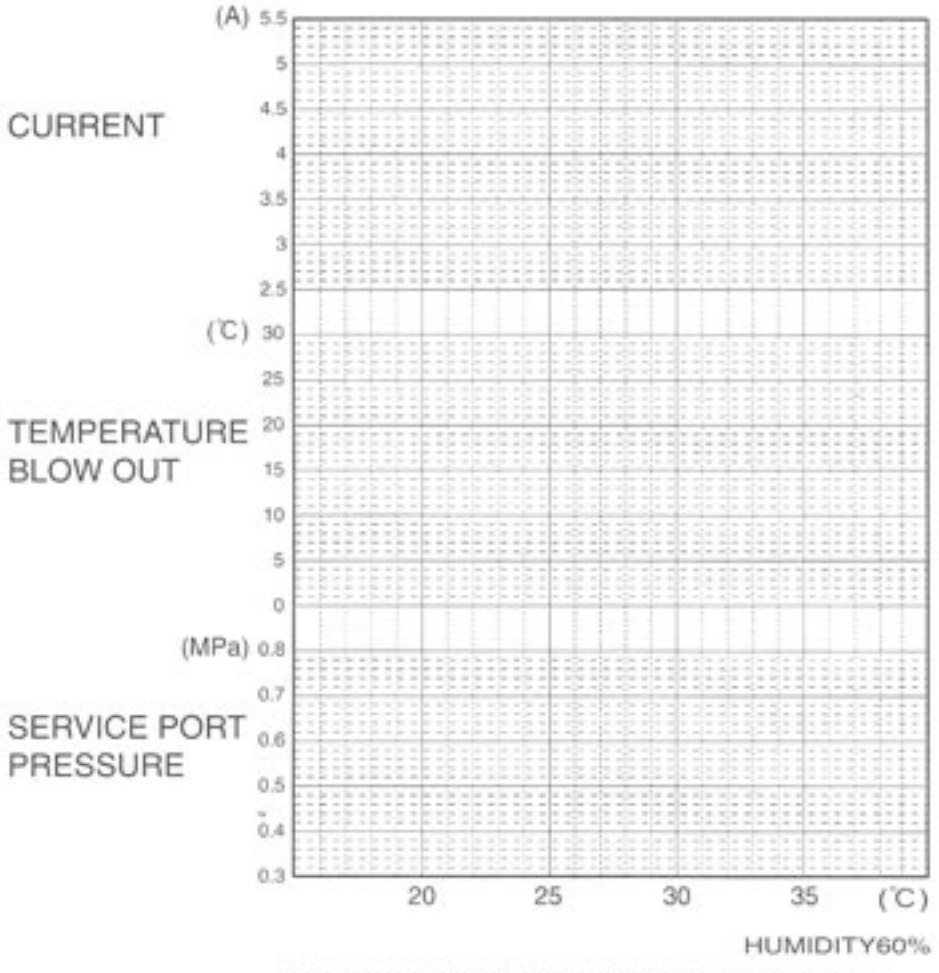

HEATING

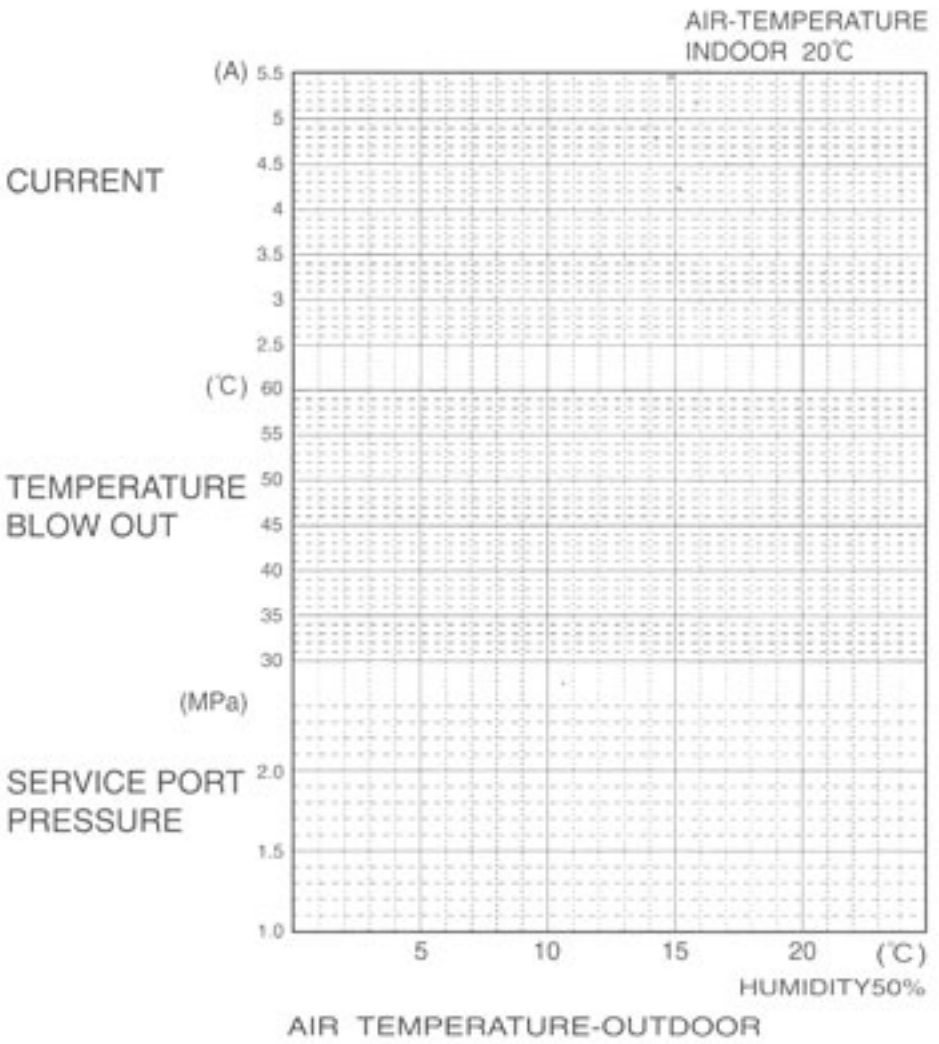

PERFORMANCE CURVE DIAGRAM

RA-1227PVU

COOLING

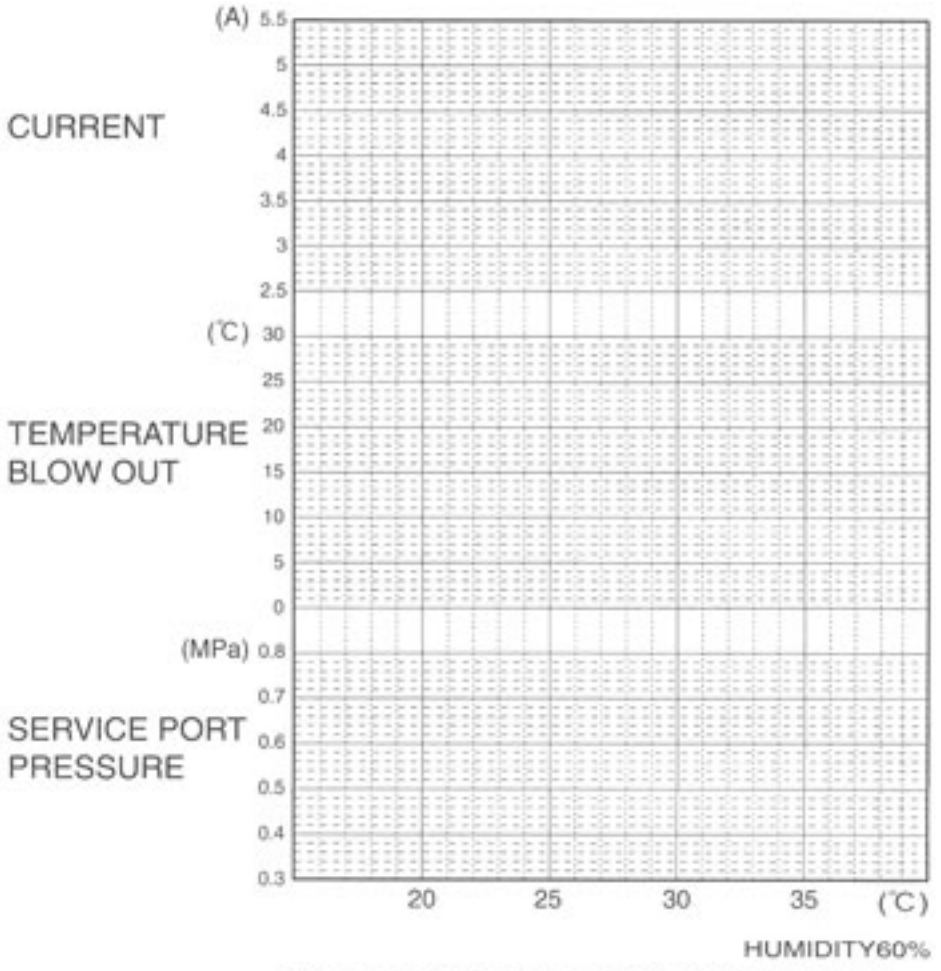

HEATING

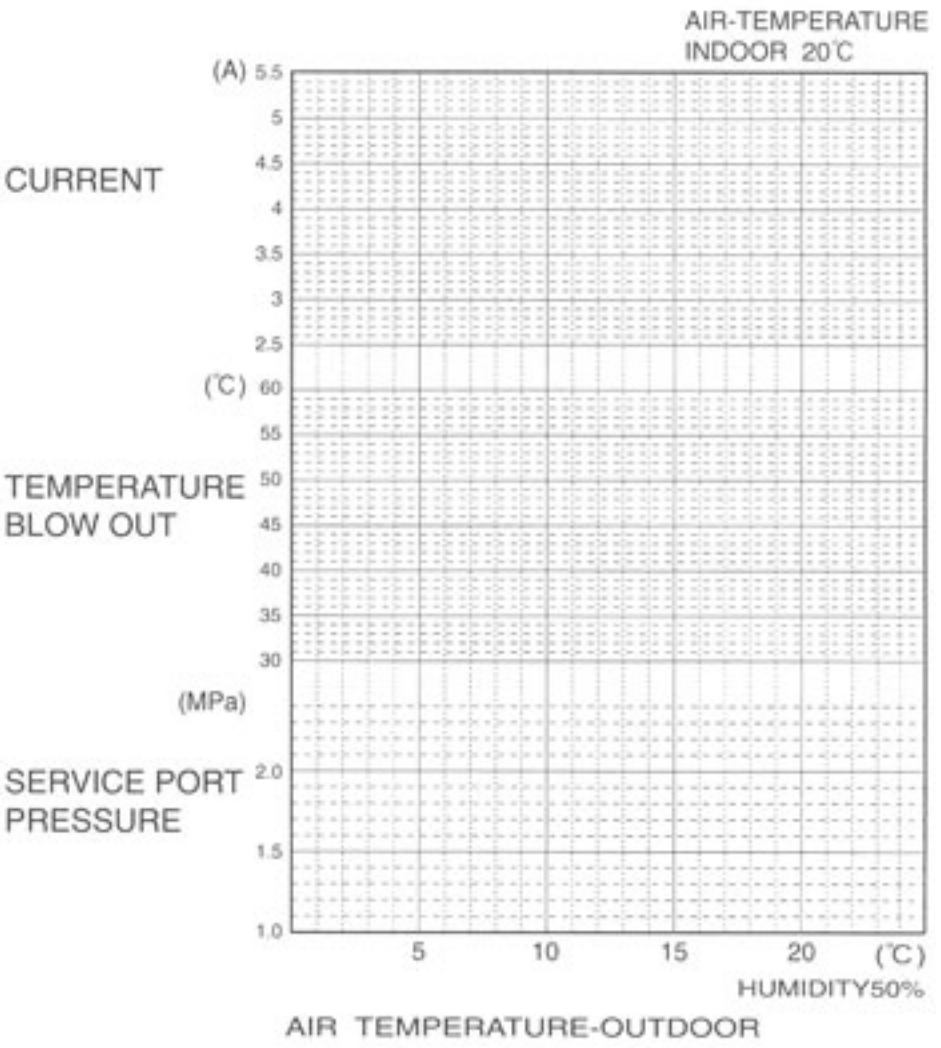

EXPLODED VIEW (INDOOR UNIT)

RC-0727PU
RC-0927PU
RC-0927PVU

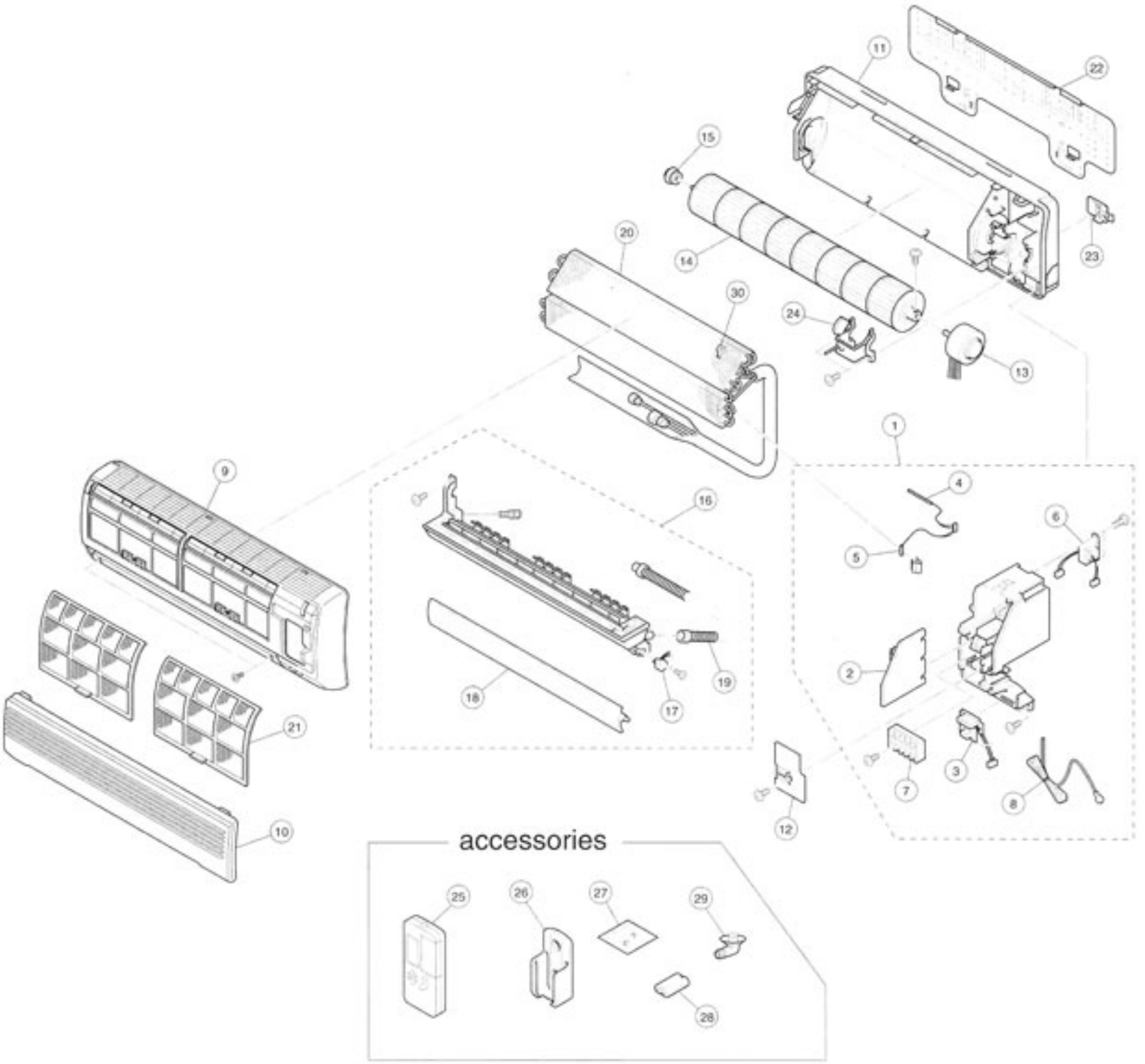

EXPLODED VIEW (INDOOR UNIT)

RC-1227PU
RC-1227PVU

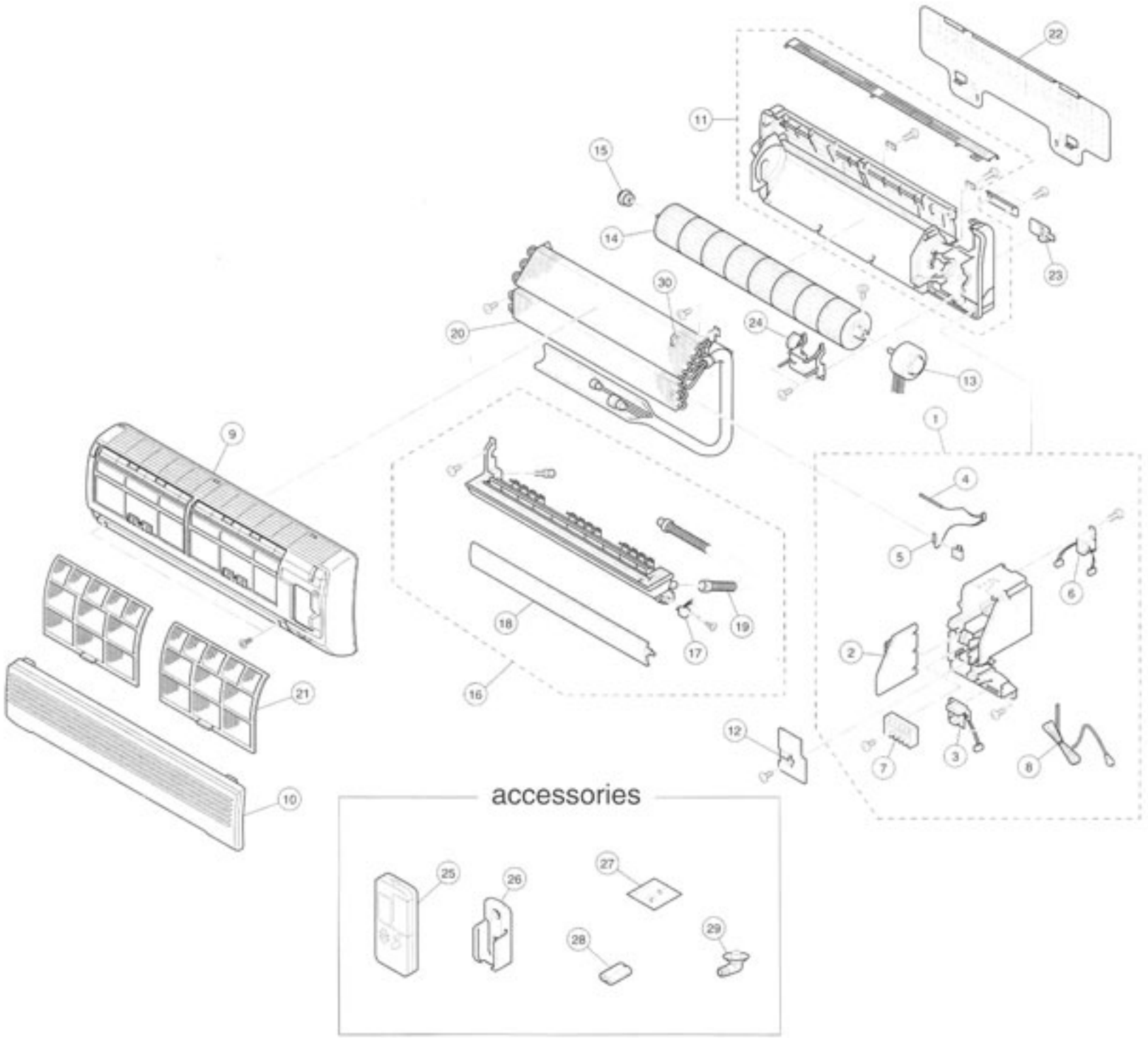

EXPLODED VIEW (INDOOR UNIT)

RC-1827PU
RC-2427PU

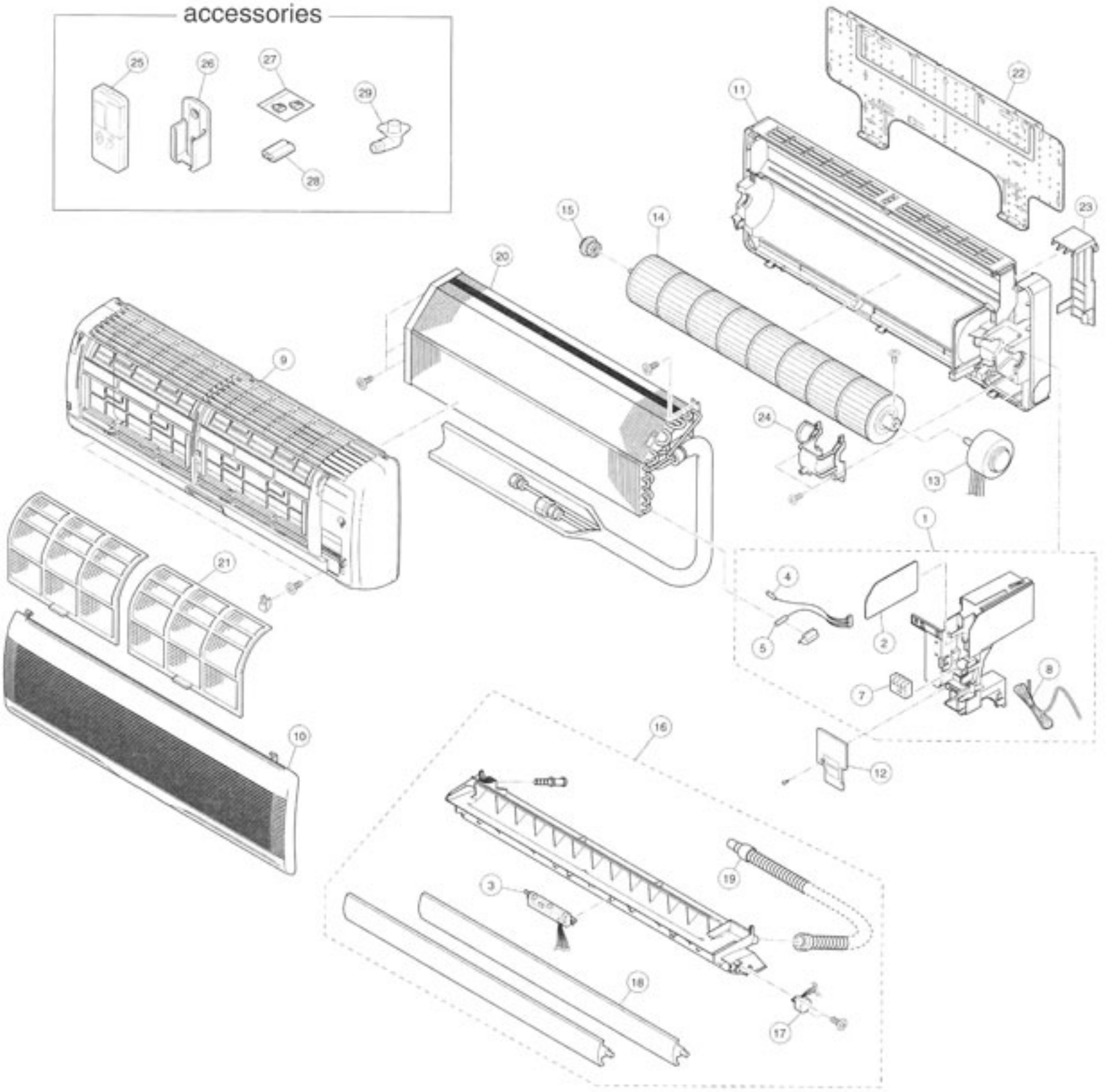

EXPLODED VIEW (OUTDOOR UNIT)

AE-0727PU
AE-0927PU

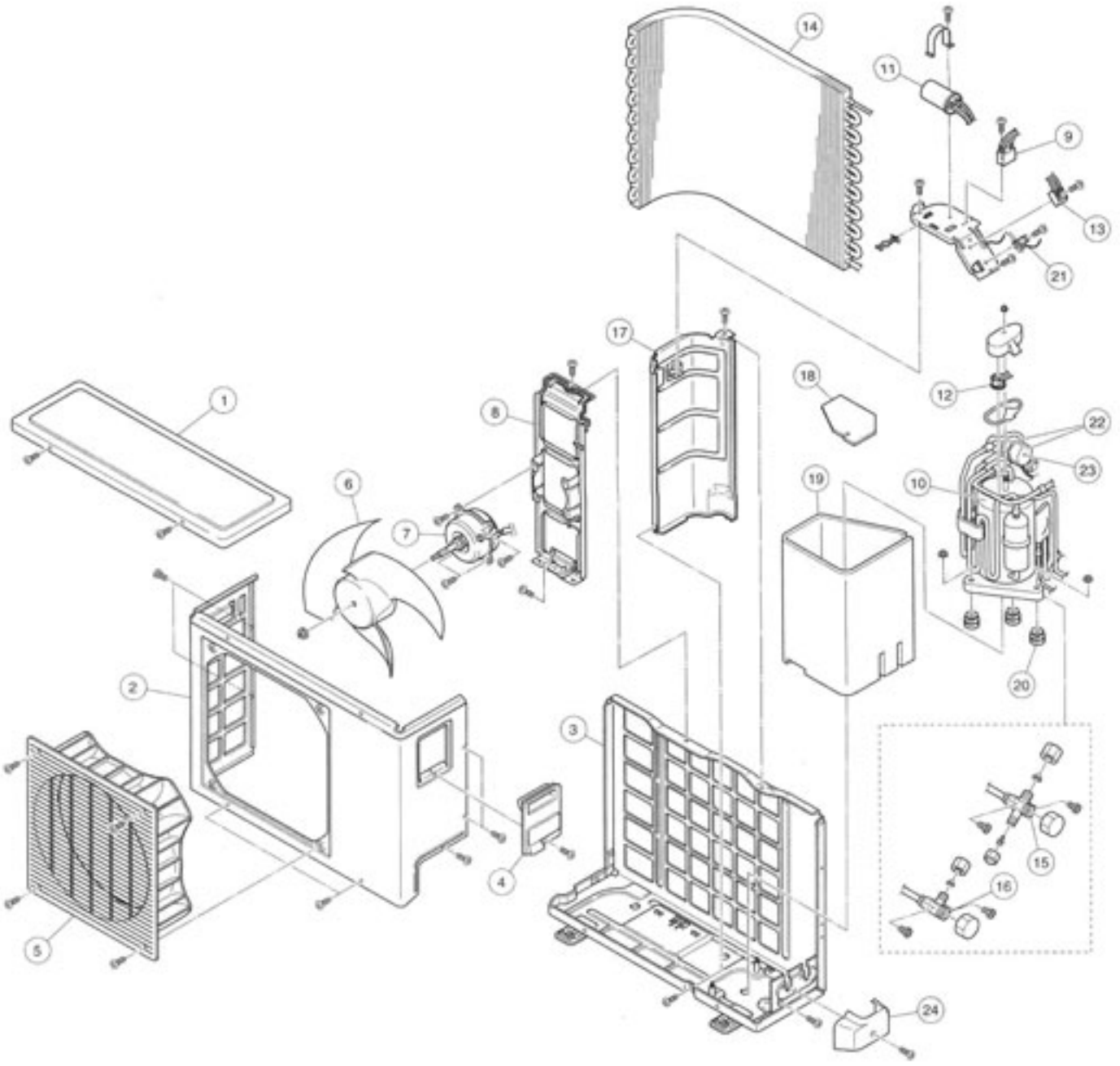

EXPLODED VIEW (OUTDOOR UNIT)

AE-1227PU

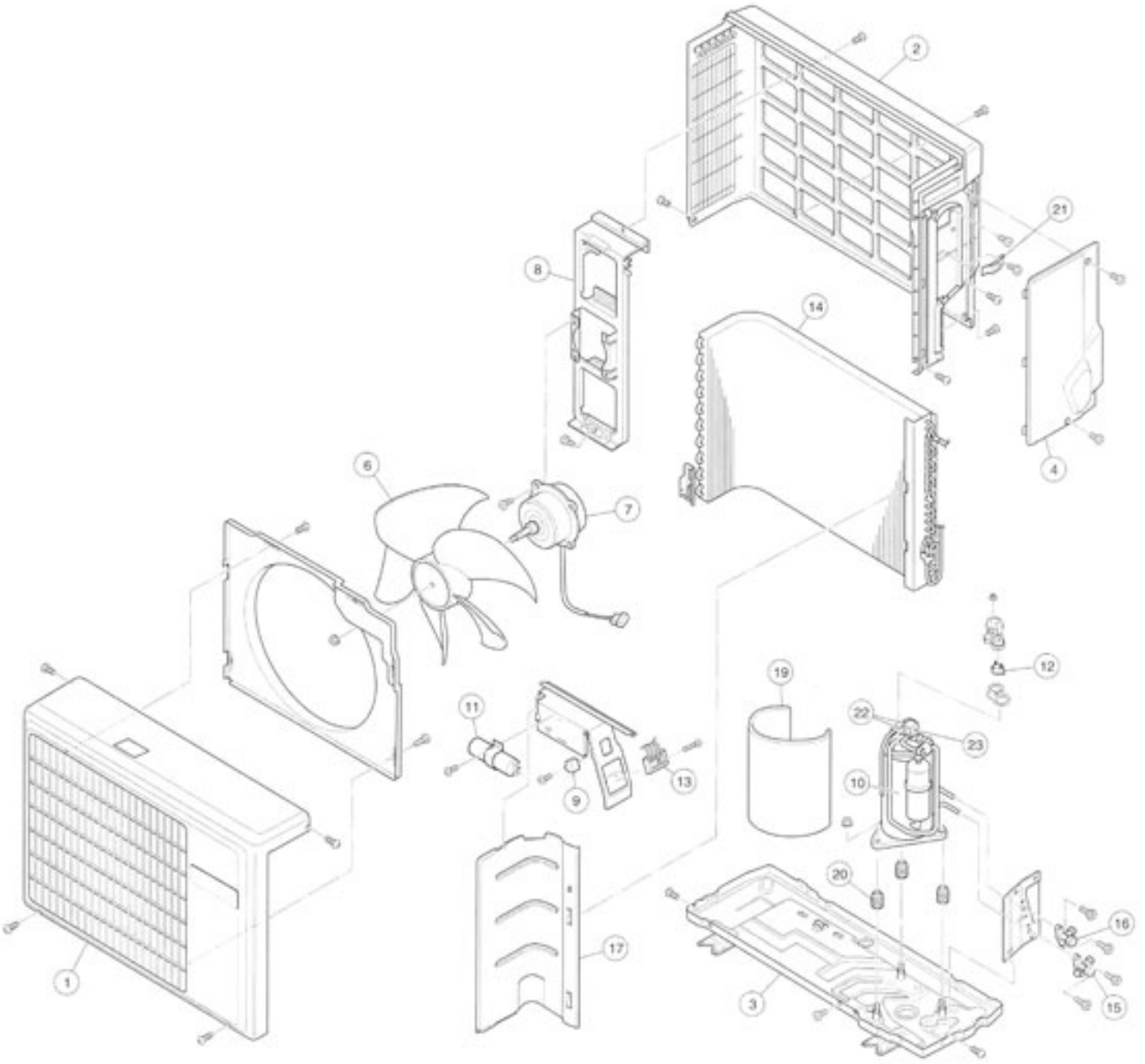

EXPLODED VIEW (OUTDOOR UNIT)

AE-1827PU

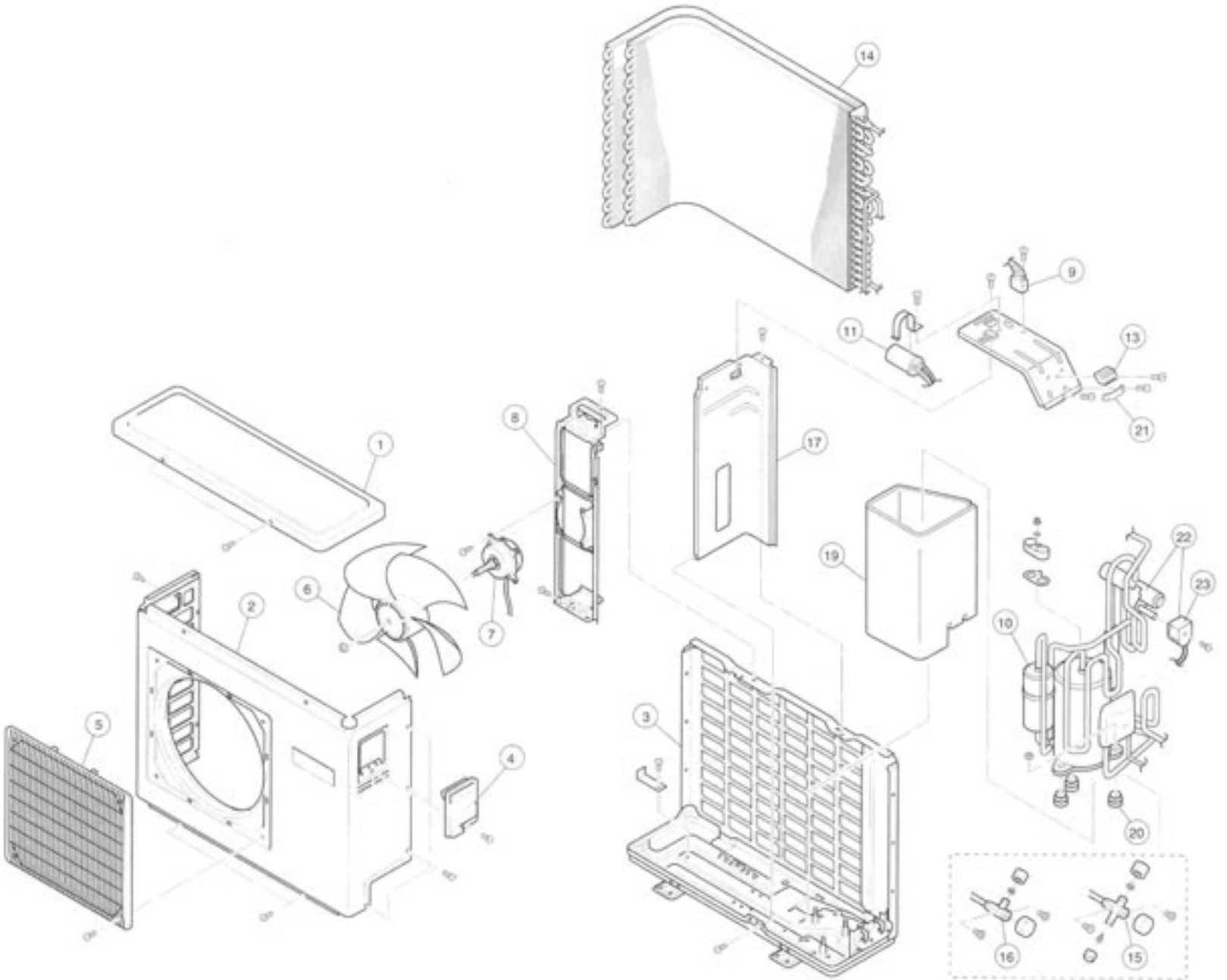

EXPLODED VIEW (OUTDOOR UNIT)

AE-2427PU

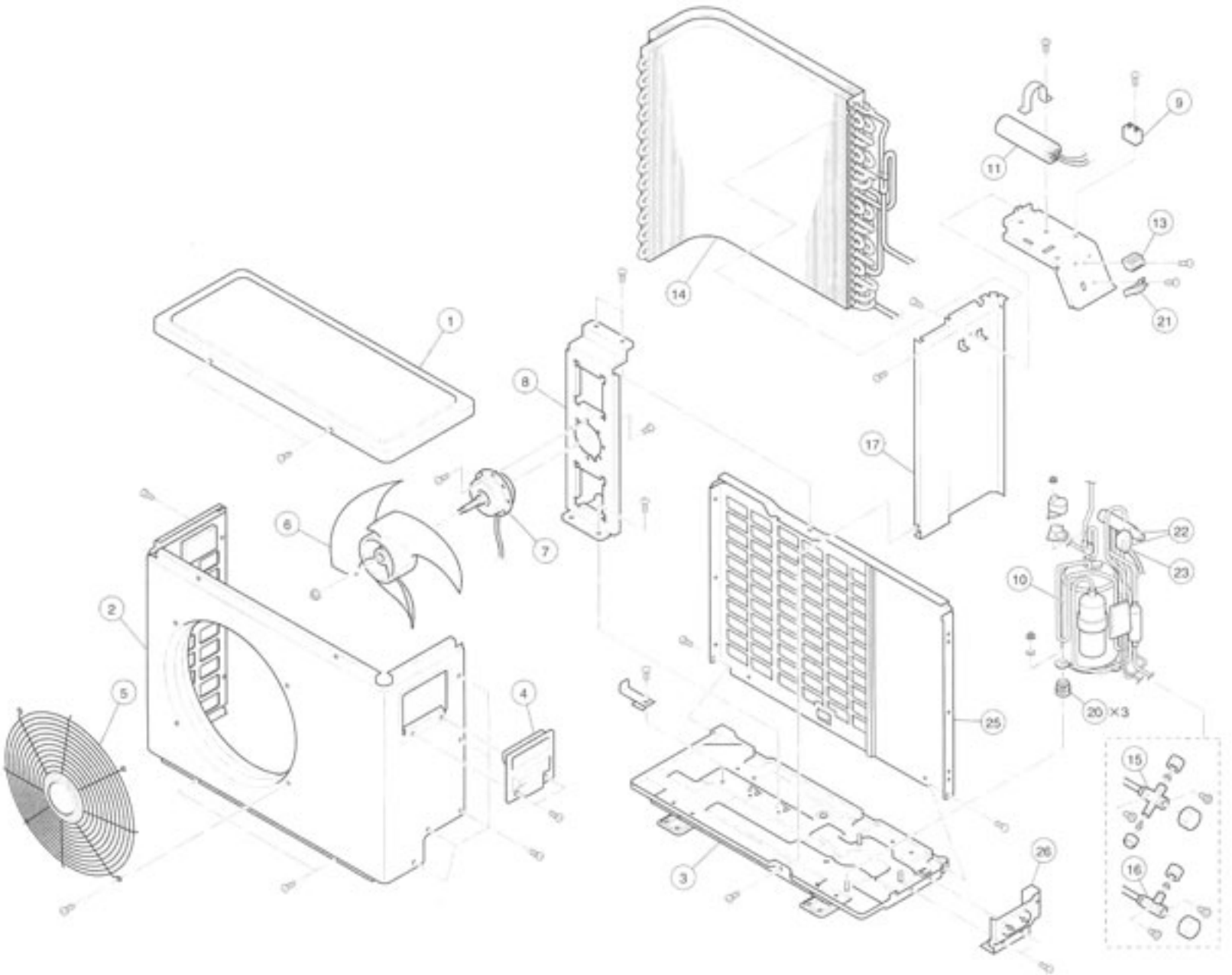

EXPLODED VIEW (OUTDOOR UNIT)

AE-0927PVU
AE-1227PVU

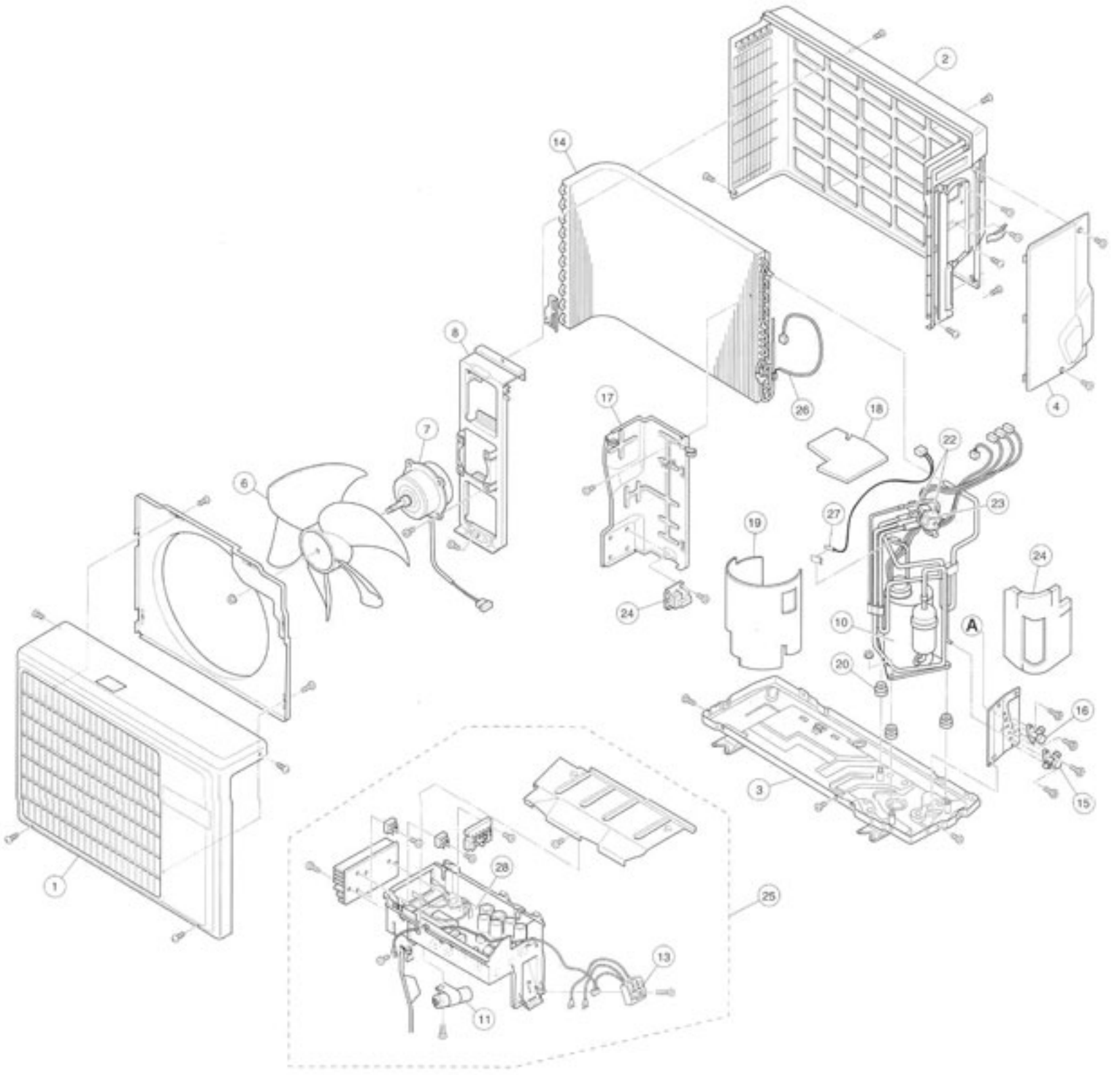

PARTS LIST (INDOOR UNIT)

NO.		RC-0727PU	RC-0927PU	RC-1227PU	RC-1827PU	RC-2427PU
1	CONTROLLER ASSY.	RC15200-60000	RC15000-60000	RC15100-60000	RC15300-61000	RC15400-61000
2	PCB (MAIN)	C7-24200	C7-24300	C7-24400	C7-24800	C7-24900
3	PCB (RECEIVER & DISPLAY)	C7-00300	←	←	C7-25000	←
4 5	SENSOR (TEMP,ROOM & HEAT EXCHAGER)	C0-09400	←	←	←	←
6	TRANSFORMER	E3-00600	←	←	-	-
		E3-02900	←	←		
7	TERMINAL BLOCK	E1-17900	←	←	←	←
8	CORD,POWER SUPPLY	E1-33000	←	←	E1-33800	←
9	FRONT PANEL	RC08400-11003	←	←	RC11800-11003	←
10	INLET GRILLE	RC15000-11010	←	←	RC15300-11000	←
11	REAR CASE ASSY.	RC03800-20001	←	RC00300-20003	RC11800-20003	←
12	WIRING LID	RC2021-54201	←	←	RC11800-81011	←
13	MOTOR,FAN	L2-03900	←	L2-02200	L2-12500	←
		L2-07200	←	L2-07700		
		L2-12200	←	L2-12300		
14	TANGENTIAL FAN	K1-00200	←	←	K1-01700	←
		K1-02500	←	←		
15	BEARING ASSY.	RC00100-42000	←	←	←	←
16	DRAIN PAN ASSY.	RC08803-30002	←	←	RC15300-30000	←
17	MOTOR,LOUVER	L2-00300	←	←	←	←
18	LOUVER (UP-DOWN)	RC2021-52500	←	←	RC11800-31041	←
19	DRAIN HOSE	C2-01000	←	←	←	←
20	EVAPORATOR ASSY.	RC10200-50002	←	RC05600-50003	RC15300-50000	RC15400-50000
21	AIR FILTER	RC08500-11010	←	RC08400-13010	RC11800-14010	←
22	MOUNTING PLATE ASSY.	RC2021-20100	←	RC00100-21002	RC11800-22010	←
23	PIPING SUPPORT	RC2021-516	←	←	RC11800-23010	←
24	MOTOR SUPPORT	RC2021-518	←	RC2521SV-51800	RC11800-42010	←
25	REMOTE CONTROLLER	W0-18900	←	←	←	←
26	REMOTE CONTROLLER HOLDER	RC11800-82010	←	←	←	←
27	SCREW CAP	RC00100-83000	←	←	RC11800-83010	←
28	BATTERY	E1-03700	←	←	←	←
29	DRAIN ELBOW	RC11800-82020	←	←	←	←
30	SENSOR HOLDER	2514RC-566	←	←	-	-

PARTS LIST (INDOOR UNIT)

NO.		RC-0927PVU	RC-1227PVU
1	CONTROLLER ASSY.	RC15500-60000	RC15600-60000
2	PCB (MAIN)	C7-25600	C7-25700
3	PCB (RECEIVER & DISPLAY)	C7-00300	←
4	SENSOR (TEMP,ROOM & HEAT EXCHAGER)	C0-09400	←
5			
6	TRANSFORMER	E3-00600	←
7	TERMINAL BLOCK	E1-17700	←
8	CORD,POWER SUPPLY	E1-33000	←
9	FRONT PANEL ASSY.	RC08400-11003	←
10	INLET GRILLE	RC15000-11010	←
11	REAR CASE ASSY.	RC03800-20001	RC00300-20003
12	WIRING LID	RC2021-54201	←
13	MOTOR,FAN	L2-03900	L2-02200
		L2-07200	L2-07700
		L2-12200	L2-12300
14	TANGENTIAL FAN	K1-00200	←
		K1-02500	←
15	BEARING ASSY.	RC00100-42000	←
16	DRAIN PAN ASSY.	RC08803-30002	←
17	MOTOR,LOUVER	L2-00300	←
18	LOUVER (UP-DOWN)	RC2021-52500	←
19	DRAIN HOSE	C2-01000	←
20	EVAPORATOR ASSY.	RC10200-50002	RC05600-50003
21	AIR FILTER	RC08500-11010	RC08400-13010
22	MOUNTING PLATE ASSY.	RC2021-20100	RC00100-21002
23	PIPING SUPPORT (1)	RC2021-516	←
24	MOTOR SUPPORT	RC2021-518	RC2521SV-51800
25	REMOTE CONTROLLER ASSY.	W0-18900	←
26	REMOTE CONTROLLER HOLDER	RC11800-82010	←
27	SCREW CAP	RC00100-83000	←
28	BATTERY	E1-03700	←
29	DRAIN ELBOW	RC11800-82020	←
30	POWER RELAY	-	-
31	SENSOR HOLDER	2514RC-566	←

PARTS LIST (OUTDOOR UNIT)

NO.		AE-0727PU	AE-0927PU	AE-1227PU	AE-1827PU	AE-2427PU
1	TOP PANEL ASSY.	AE15000-12000	←	AE15100-12000	AE15300-12000	AE15400-11000
2	SIDE PANEL	AE2020-202	←	AE00300-12000	AE15300-11000	AE00200-11002
3	BOTTOM PANEL ASSY.	AE15200-12000	AE15000-11000	AE15100-11000	AE01500-12002	AE15400-13000
4	WIRING LID	2813EP-502	←	AE2522PV-504	2813EP-502	AE00200-16000
5	OUTLET GRILLE	AE2020-501	←	-	AE2521SV-501	Y0-16300
6	PROPELLER FAN	K1-00300	←	K1-00400	K1-00600	K1-00703
7	MOTOR	L2-02100	←	L2-07400	L2-03301	L2-02504
		L2-08400	←		L2-08000	
		L2-12400	←		-	
8	BRACKET, MOTOR	AE2020-212	←	AE2522PV-201	AE5022C-201	AE00200-31013
9	CAPACITOR,MOTOR	E1-03300	←	E1-18100	E1-07000	E1-03800
10	COMPRESSOR	A0-05600	A0-03200	A0-05800	A0-03300	A0-03700
11	CAPACITOR,COMPRESSOR	E1-03201	E1-33100	E1-33200	E1-06700	E1-23900
12	OVER LOAD RELAY	A0-05610	A0-03250	A0-05850	-	-
13	TERMINAL BLOCK	E1-17900	←	←	←	←
14	CONDENSOR ASSY.	AE15200-60000	AE15000-60000	AE15100-61000	AE15300-60000	AE15400-60000
15	VALVE,SERVICE (5/8,1/2 OR 3/8)	K4-02100	←	K4-00500	K4-02400	K4-01800
		K4-03900	←			
16	VALVE,SERVICE (1/4)	K4-00200	←	K4-00300	K4-05100	K4-03500
		K4-03700	←			
17	BAFFLE PANEL ASSY.	AE00100-20001	AE15000-20000	AE15100-20000	AE01500-20000	AE10000-20000
18	SOUND PROOF MATERIAL	AE00100-77010	AE15000-79010	-	-	-
19	SOUND PROOF MATELIAL (SIDE)	AE2222PU-60201	AE15000-78010	AE15100-77010	AE2520C-601B	-
20	VIBRATION PROOF RUBBER	A0-00130	A0-03280	A0-05860	A0-03330	A0-03740
21	FIXTURE,CORD	AE2522PV-208	←	←	←	←
22	4-WAY VALVE	K7-08300	←	K7-08500	←	←
23	COIL,4-WAY VALVE	K7-08400	←	K7-08600	←	K7-08700
24	VALVE COVER	AE15000-11030	←	-	-	-
25	BACK PANEL	-	-	-	-	AE15400-12000
26	BRACKET,VALVE	-	-	-	-	AE00200-15010

PARTS LIST (OUTDOOR UNIT)

NO.		AE-0927PVU	AE-1227PVU
1	TOP PANEL ASSY.	AE15100-12000	←
2	SIDE PANEL ASSY.	AE00300-12000	←
3	BOTTOM PANEL ASSY.	AE06400-11001	←
4	WIRING LID	AE2522PV-504	←
5	PROPELLER FAN	K1-00400	←
6	MOTOR	L2-07300	←
7	BRACKET, MOTOR	AE2522PV-201	←
8	CAPACITOR,MOTOR	-	-
9	COMPRESSOR	A0-03000	←
10	CAPACITOR,COMPRESSOR	-	-
11	OVER LOAD RELAY	-	-
12	TERMINAL BLOCK	E1-17800	←
13	CONDENSOR ASSY.	AE06400-61000	AE15600-61000
14	VALVE,SERVICE (3/8)	K4-00500	←
15	VALVE,SERVICE (1/4)	K4-00300	←
16	BAFFLE PANEL ASSY.	AE01100-20001	←
17	SOUND PROOF MATERIAL	AE06400-77010	←
18	SOUND PROOF MATELIAL	AE06400-78010	←
19	VIBRATION PROOF RUBBER	A0-03030	←
20	FIXTURE,CORD	AE2522PV-208	←
21	4-WAY VALVE ASSY.	AE08800-71000	←
22	COIL,4-WAY VALVE	K7-04000	←
23	SOUND PROOF MATERIAL (SIDE)	AE06400-76010	←
24	REACTOR	E1-16900	←
25	CONTROLLER ASSY.	AE15500-41000	AE15600-41000
26	SENSOR (TEMP.DEFROST)	C0-00901	←
27	SENSOR (TEMP.DISCHARGE)	C0-01200	←
28	PCB (MAIN)	C7-10200	C7-25800

ELECTRIC CIRCUIT DIAGRAM

RA-0727PU/RA-1227PU

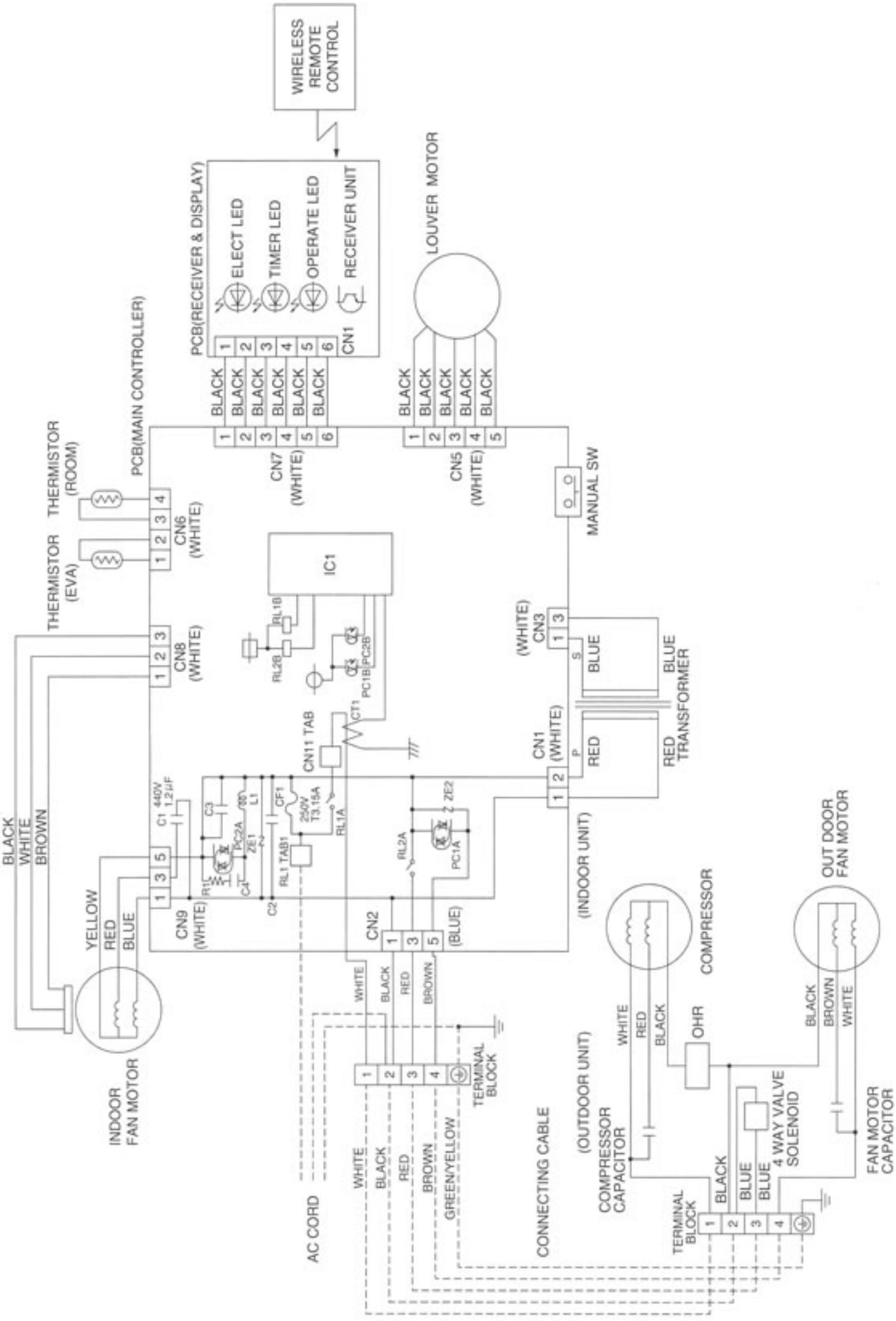

ELECTRIC CIRCUIT DIAGRAM

RA-0927PU

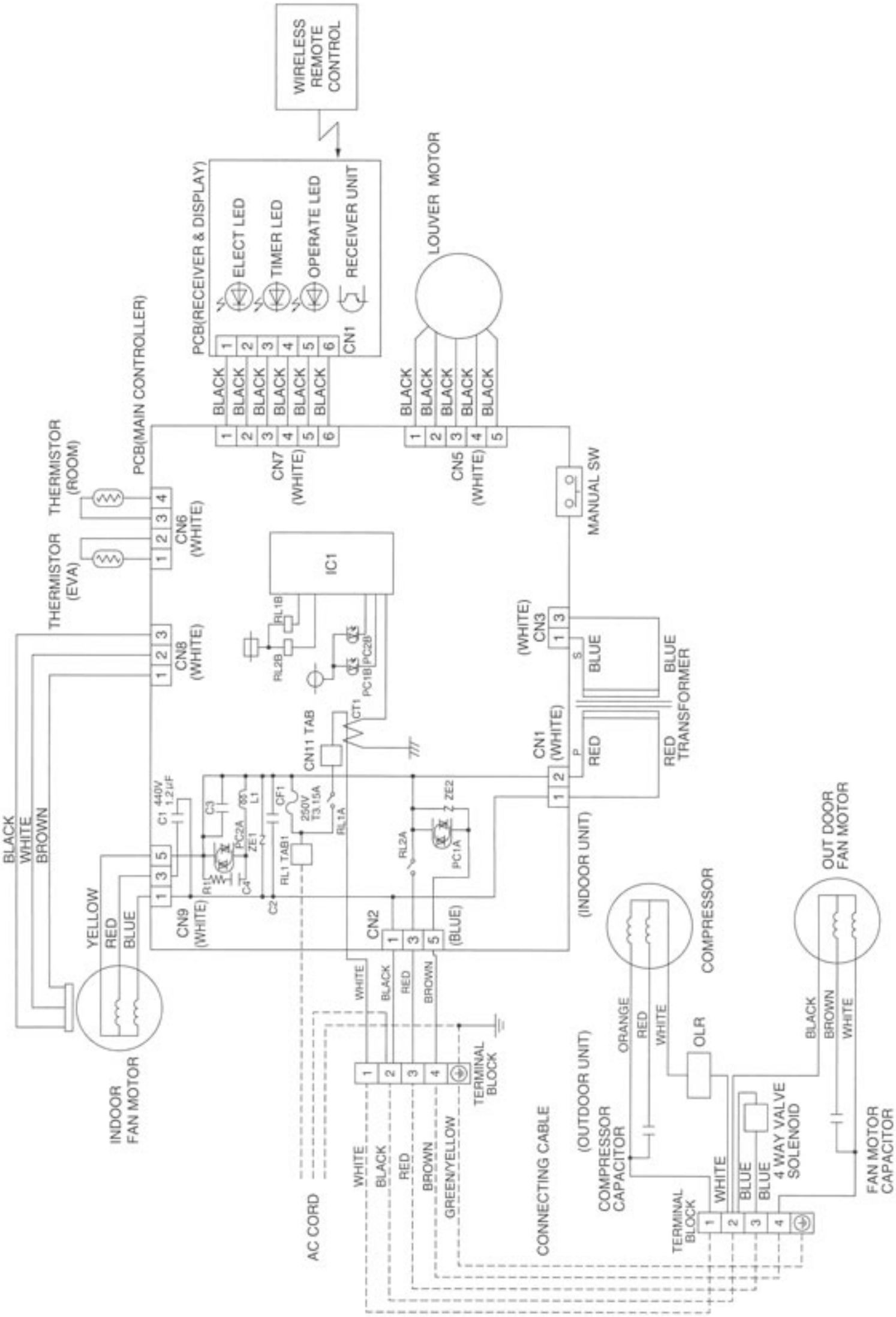

ELECTRIC CIRCUIT DIAGRAM

RA-1827PU/RA-2427PU

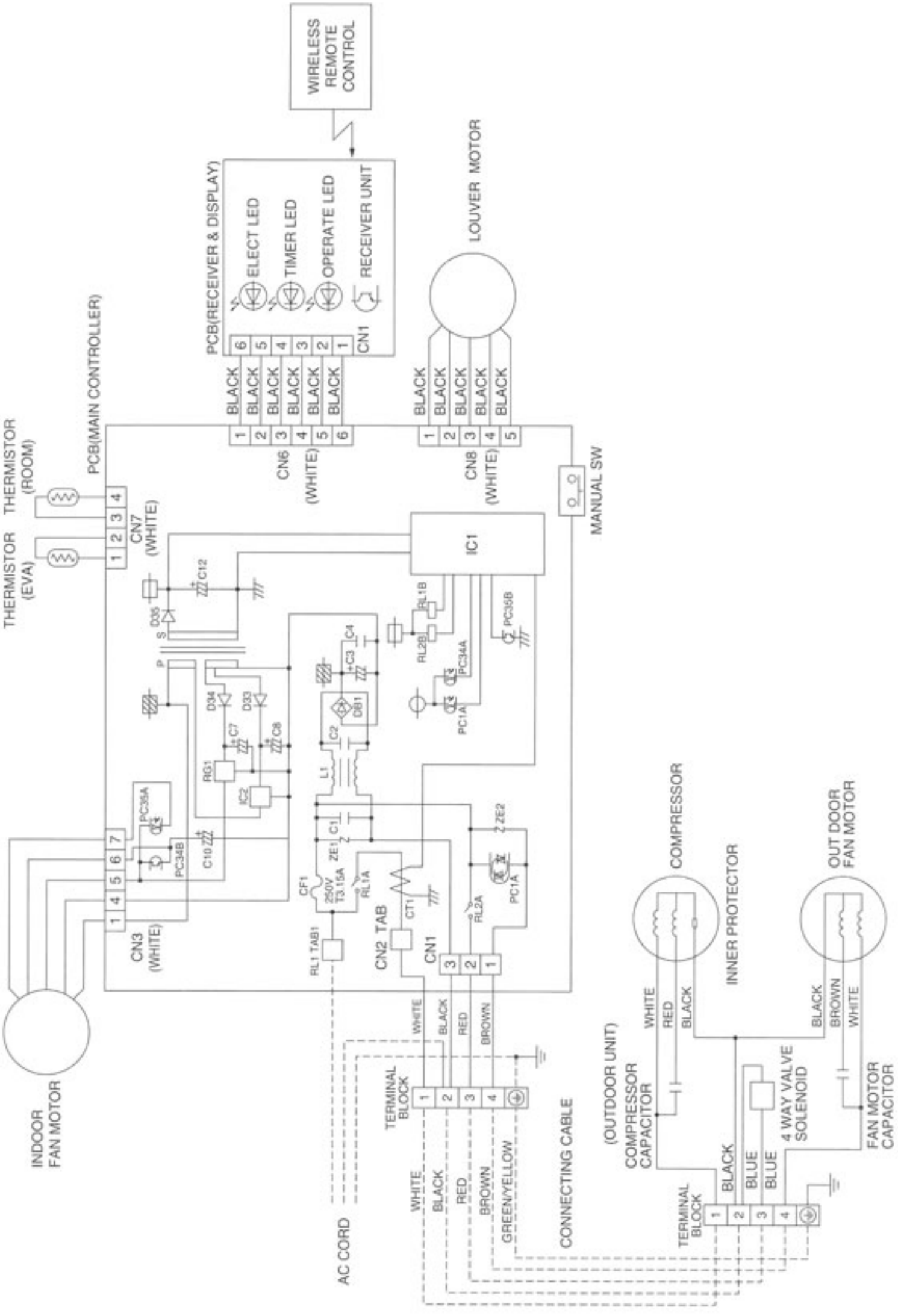

ELECTRIC CIRCUIT DIAGRAM

RC-0927PVU/RC-1227PVU

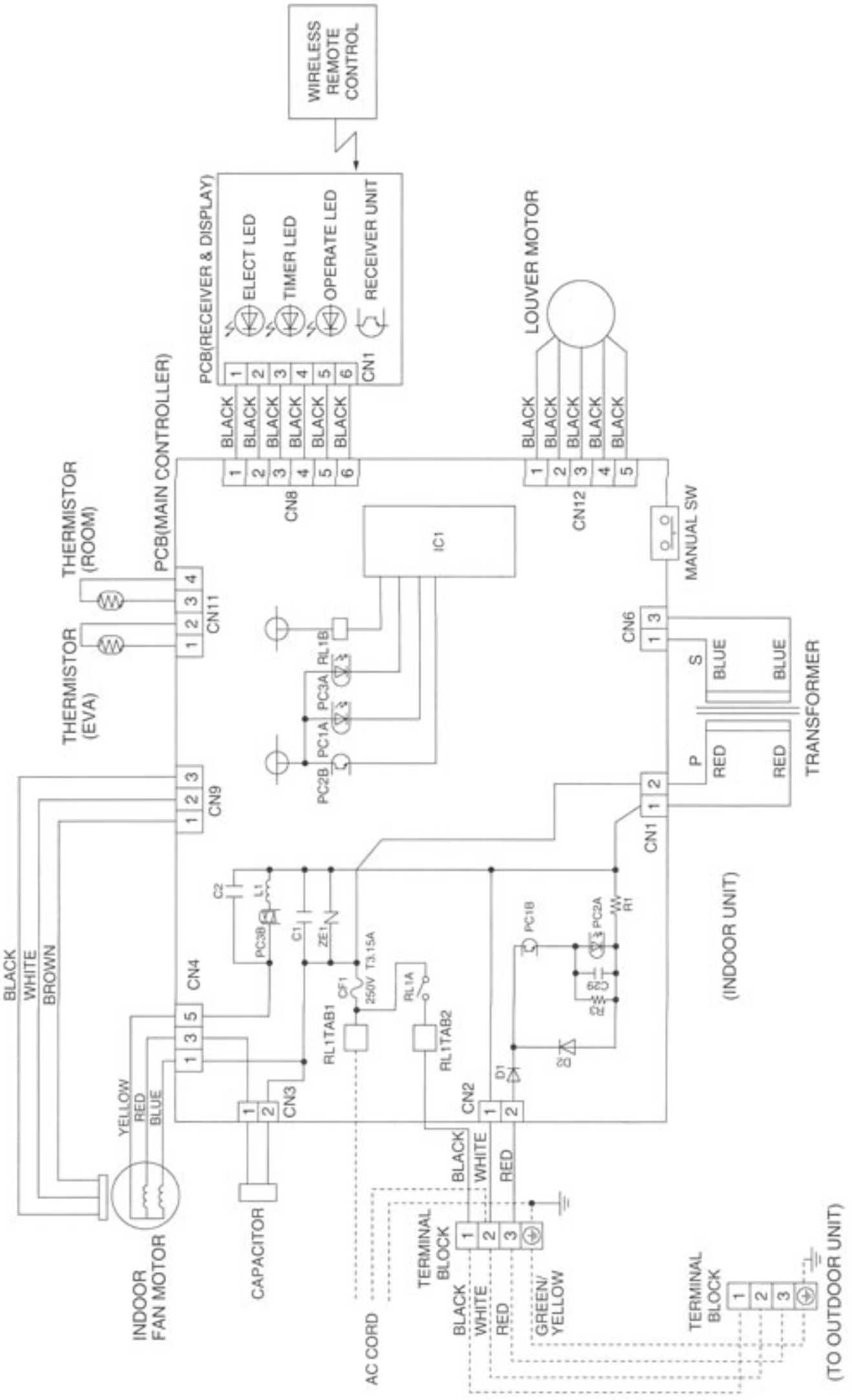

ELECTRIC CIRCUIT DIAGRAM

AE-0927PVU/AE-1227PVU

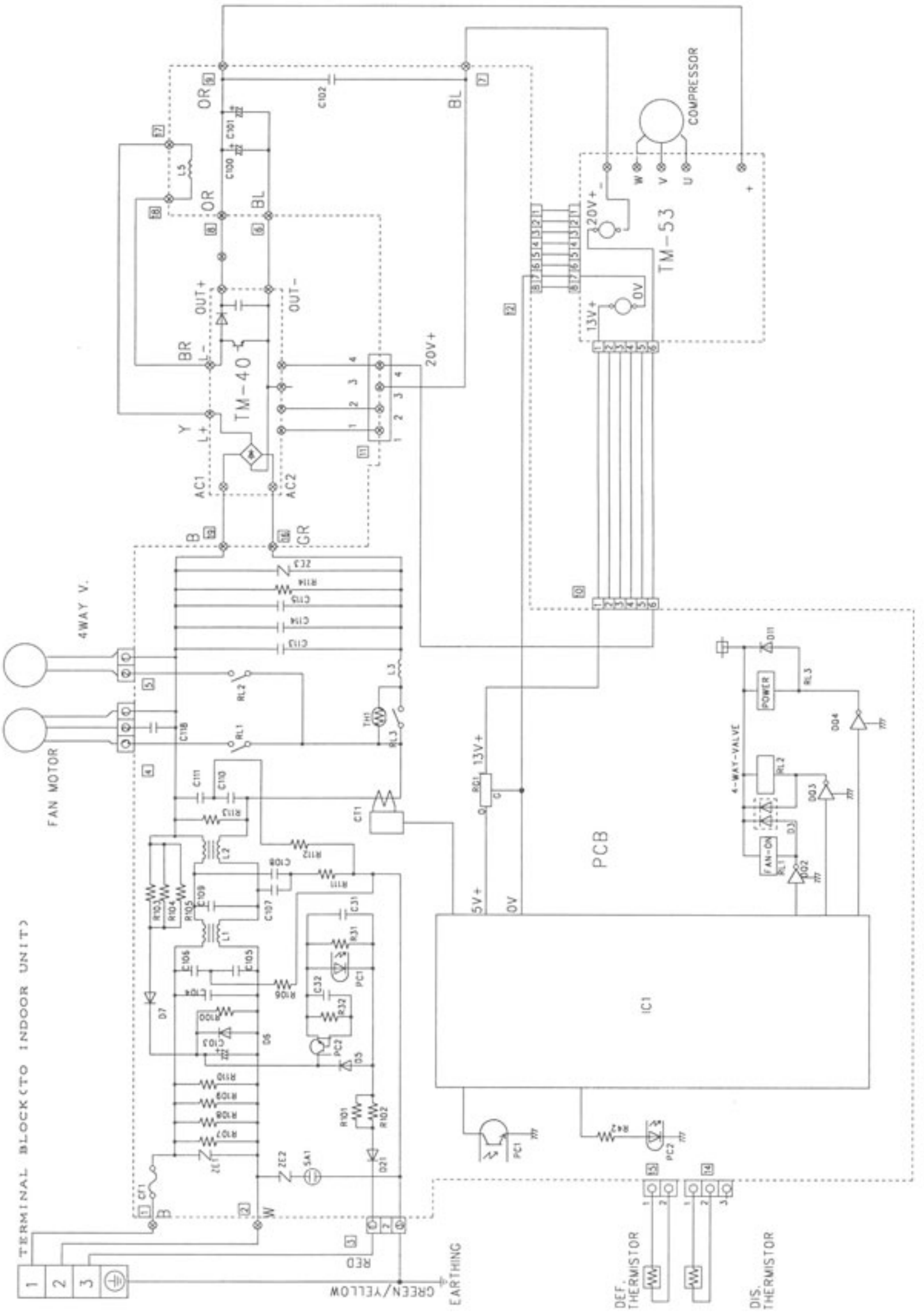

RA-0727PU/RA-0927PU/RA-1227PU

REFRIGERATION CYCLE DIAGRAM

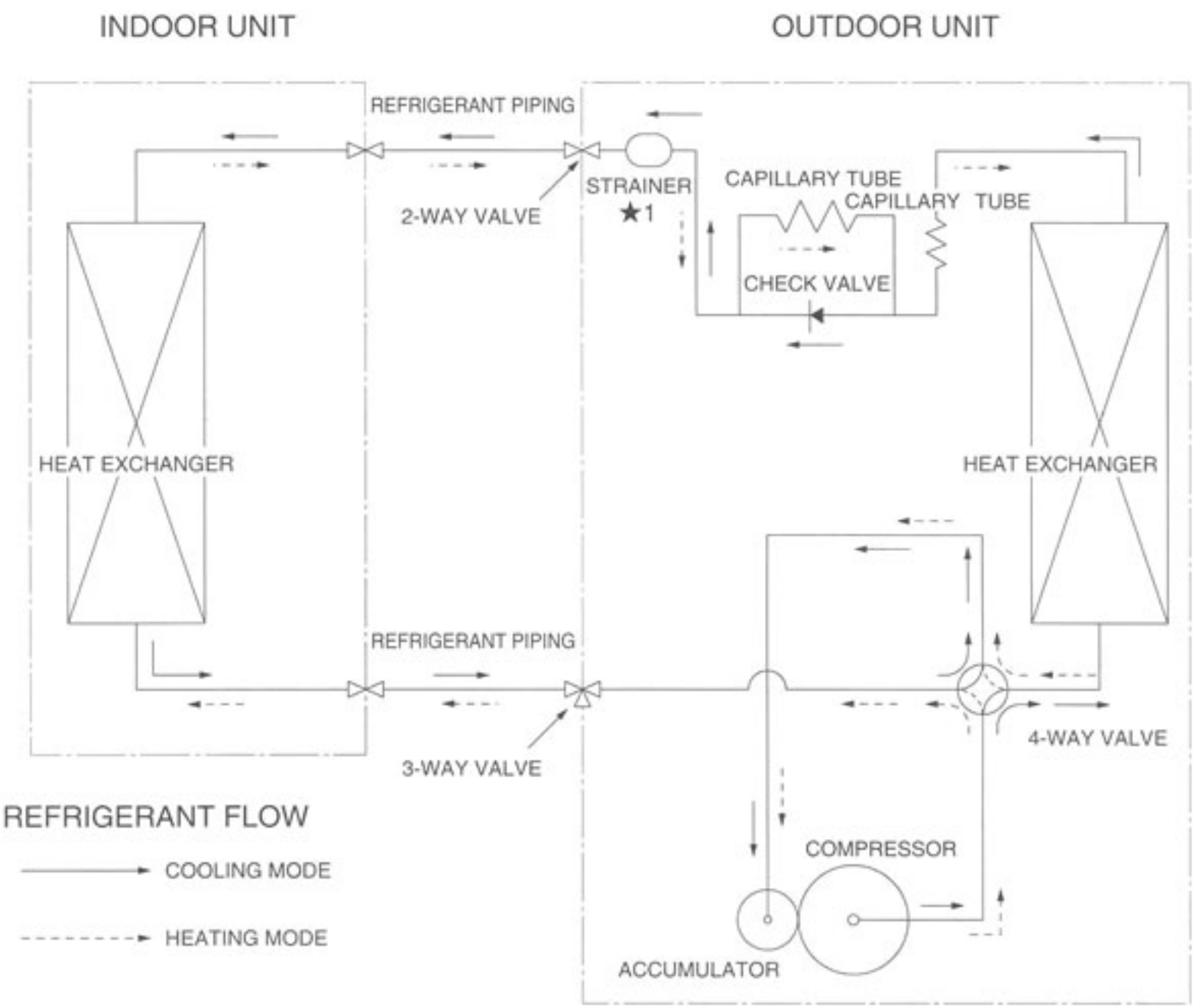

RA-1827PU/RA-0927PVU/RA-1227PVU

REFRIGERATION CYCLE DIAGRAM

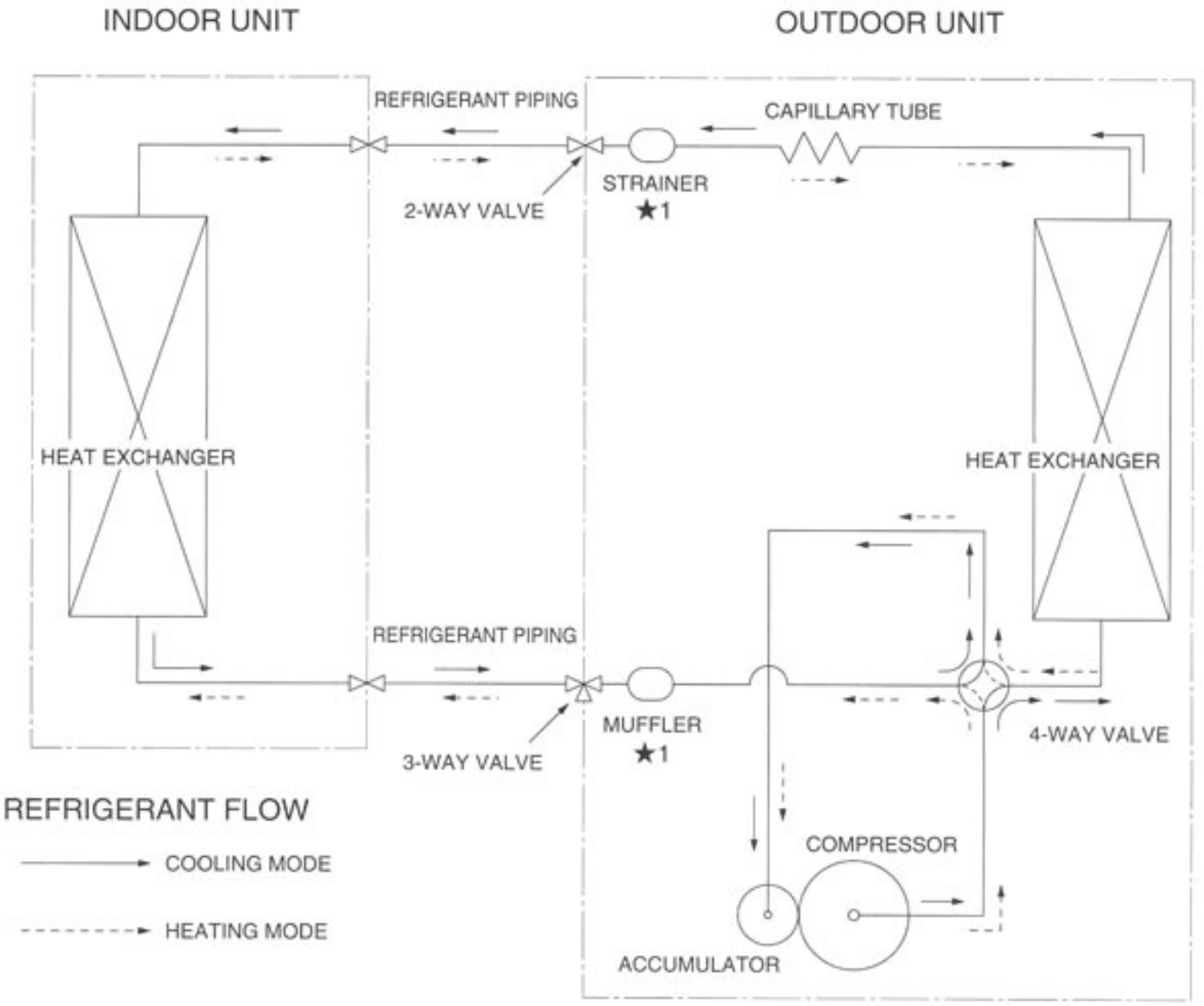

★1 RA-1827PU ONLY

RA-2427PU

REFRIGERATION CYCLE DIAGRAM

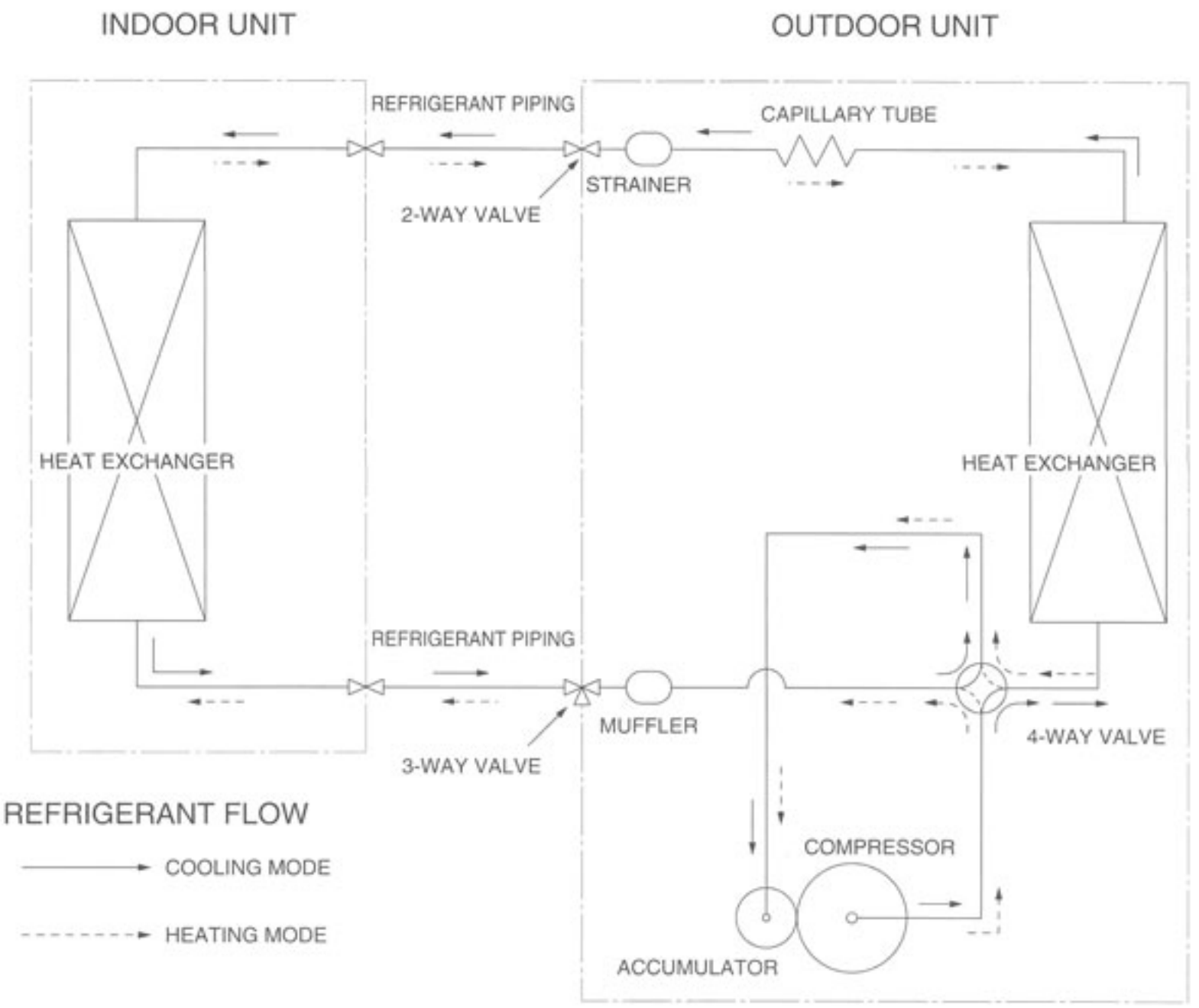

RA-5-[4]

ISSUED	JAN,2002
REVISED	JAN,2002
REVISED	JAN,2002
REVISED	FEB,2002

CHOFU SEISAKUSHO CO., LTD.

Chofuohgimachi, Shimonoseki City,
Yamaguchi Pref. JAPAN

Printed in Japan